# CSMcalibrate

Quickstart Guide

# Contents

**1 Introduction . . . 1**
1.1 About this quickstart guide . . . 1
1.2 Symbols and writing conventions . . . 1
1.3 Legal disclaimer . . . 2
**2 Calibrating CSM Measurement Modules . . . 3**
2.1 Which measurement modules can be calibrated? . . . 3
2.2 Which calibrators are supported? . . . 3
2.3 Components for setting up a calibration station . . . 4
2.4 Calibration setups for CSM measurement modules . . . 5
2.4.1 Calibration setup for AD CAN measurement modules . . . 5
2.4.2 Calibration setup for AD ECAT measurement modules . . . 6
2.4.3 Calibration setup for CNT CAN measurement modules . . . 7
2.4.4 Calibration setup for PT CAN measurement modules . . . 8
2.4.5 Calibration setup for STG CAN measurement modules . . . 9
2.4.6 Calibration setup for STG ECAT measurement modules . . . 10
2.4.7 Calibration setup for TH CAN measurement modules . . . 11
2.5 Calibrating an AD CAN measurement module . . . 12
2.5.1 Information on calibration process and sensor supply test . . . 16
2.5.2 Finalize the calibration and testing process and create the calibration certificate 17
**3 Program Menu . . . 18**
3.1 Design and structure of the user interface . . . 18
3.1.1 Main menu . . . 18
3.1.2 Displaying ambient temperature and relative humidity . . . 19
3.2 Calibration . . . 19
3.3 Manage Test Equipment . . . 19
3.3.1 Create . . . 20
3.3.1.1 Adding new test equipment . . . 20
3.3.1.2 Editing the entries of existing test equipment . . . 21
3.3.2 Manage . . . 21
3.3.2.1 Entering the calibration data for a calibrator . . . 22
3.3.2.2 View calibration certificate . . . 22
3.4 Settings . . . 23
3.4.1 Overview . . . 23

3.4.2 Customization . . . 24
3.4.2.1 Output . . . 24
3.4.2.2 Header . . . 25
3.4.2.3 Title page . . . 25
3.4.2.4 Remarks . . . 26
3.4.2.5 Sample document . . . 26
3.4.3 Workspace . . . 27
3.4.3.1 Environment . . . 27
3.4.3.2 Test equipment . . . 28
3.4.3.3 Interfaces . . . 29
3.4.3.4 Calibration setup . . . 30
3.4.3.5 Calibration points . . . 31
3.4.4 Assessment . . . 34
3.4.5 Import/Export . . . 35
3.5 User management and login . . . 36
3.5.1 Initial login . . . 36
3.5.2 User management . . . 37
3.5.2.1 Opening the user overview . . . 38
3.5.2.2 Creating a new user account . . . 38
3.5.2.3 Making changes to a user account . . . 40
3.6 Help . . . 41
3.6.1 License . . . 41
3.6.2 About . . . 42
3.6.3 Update . . . 43
**4 Appendix . . . 44**
4.1 Calibration setups for further CSM measurement modules . . . 44
4.1.1 HV AD2 IF20 MM (CAN) . . . 44
4.1.2 HV AD4 OW1000 MM (ECAT) . . . 45
4.1.3 HV AD4 XW1000 TBM (ECAT) . . . 45
4.1.4 HV AD4 XW20 MM (CAN) . . . 46
4.1.5 HV AD4 XW4000 (XCP) . . . 46
4.1.6 HV PT2 MM (CAN) . . . 47
4.1.7 HV STG4 pro MM (ECAT) . . . 47
4.1.8 HV TH4 evo (CAN) . . . 48
4.2 List of figures . . . 49
4.3 List of tables . . . 51

# 1 Introduction

## 1.1 About this quickstart guide

This quickstart guide contains important information for using the software. Please read the entire document carefully before installation and initial operation.

## 1.2 Symbols and writing conventions

| Symbol/note | Meaning | Example of application |
|---|---|---|
| ☞ | User instruction | ☞ Enter the **Test equipment number** for the new test equipment. |
| ⇨ | Result of an action | ⇨ The **New department** dialog opens. |
| → | Cross reference to external information source(s) | → Chapter 2.4 "Account" |
| | Terms in bold blue that appear in the text indicate an integrated cross-reference. | ▸ In the **Environment** menu, the **Monitoring** option must be enabled. |
| * | A field marked with an asterisk * is a mandatory field that needs to be completed. | 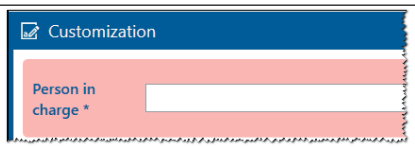  |
| i | This pictogram refers to important notes or additional information on a specific topic. | 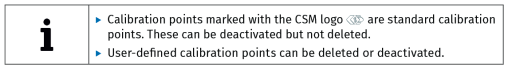  |
| | A directive contains important information about the product described in the guide. Failure to observe a directive may result in malfunction and/or damage to property and material. | 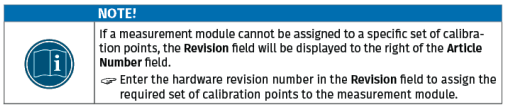  |

Tab. 1-1: Symbols and writing conventions

## 1.3 Legal disclaimer

This guide and other documents are part of the product and contain important information for its safe and efficient use. To maintain the high quality level the product is continuously being developed, which may result in the product's technical details changing at short notice. As a result, the contents of this documentation may differ from the technical specifications of the product. No claims against the manufacturer can therefore be derived from the contents of the product documentation.

Vector Informatik GmbH is not liable for technical or editorial errors or missing information.

Vector Informatik GmbH assumes no liability for damage resulting from improper use of the product and/or non-observance of the product documentation, in particular the safety instructions.

# 2 Calibrating CSM Measurement Modules

CSMcalibrate is a calibration software for the automated handling of calibration processes. The software also provides the option of documenting calibration processes and organizing calibration and device data.

This quickstart guide applies to CSMcalibrate, version 3.1.0

## 2.1 Which measurement modules can be calibrated?

| LV measurement modules | HV measurement modules |
|---|---|
| ▸ AD CAN MM series[1] | ▸ HV AD CAN MM series<br>▸ HV AD CAN TBM series |
| ▸ AD ECAT MM series[1] | ▸ HV AD ECAT MM series<br>▸ HV AD XCP MM series |
| ▸ CNT CAN MM series[1] | |
| ▸ PT CAN MM series[1] | ▸ HV PT2 MM<br>▸ HV PT8 TBM |
| ▸ STG6 CAN MM series | |
| ▸ STG6 ECAT MM series | ▸ HV STG4 ECAT MM series |
| ▸ TH CAN MM series (Type K, T and J) [1] | ▸ HV TH CAN MM series<br>▸ HV TH CAN TBM series |

Tab. 2-1: List of CSM measurement modules that can be calibrated (CAN/ECAT/XCP)

## 2.2 Which calibrators are supported?

- Burster Digistant 4462
- Burster Digistant 4463
- Burster RTD Simulator 4530
- Fluke 5500A
- Fluke 5502E
- Fluke 5522A
- Fluke 5530A
- Fluke 5540A
- HBM K148
- Tektronix AFG 3021C

1 With the appropriate firmware, these measurement modules are also available as CANopen versions. A special license is required to calibrate these measurement modules. See chapter 3.6.1 "License".

## 2.3 Components for setting up a calibration station

A calibration station for the calibration of the measurement modules listed in Tab. 2-1 consists of the following components:

- a PC on which CSMcalibrate (plus license dongle) and the drivers for the interface in use are installed
- a power supply unit for providing the CSM measurement module to be calibrated (DUT) with power
- a calibrator (→ chapter 2.2)
- a Calib Adapter[2] (AD CAN/ECAT, HV AD CAN/ECAT, CNT CAN, PT CAN and HV PT CAN) or a cable whip (TH CAN, HV AD XW CAN/ECAT, STG CAN/ECAT and HV STG ECAT)
- a Connection cable to PC (USB-C cable) for connecting the Calib adapter to the PC (AD, CNT, and PT modules)
- a serial data cable for connecting the calibrator to the PC
- a CAN interface or an XCP-Gateway plus ECAT connecting cable to connect the DUT to the PC and the power supply
- a CAN or ECAT interface cable (e.g. K176 (CAN) or K420 (ECAT))
- a CAN termination resistor (if required)

2 A Calib Adapter is a module for distributing the test signals from the calibrator to the measurement inputs of the DUT. The Calib Adapter is available in two versions: "Calib Adapter AD/CNT" and "Calib Adapter PT".

## 2.4 Calibration setups for CSM measurement modules

| | |
|---|---|
| i | The calibration setups described in the following chapters are model setups. Components such as the CAN interface cable K176 with integrated termination resistor or the CAN interface VN 1610 are used for demonstrative purposes. There are alternative CSM interface cables and CAN interfaces that can be used instead for the calibration setups. |

| | |
|---|---|
| i | This chapter provides examples of calibration setups for the module types AD CAN/ECAT, CNT CAN, PT CAN, STG CAN/ECAT, and TH CAN. Diagrams of calibration setups for further CSM measurement module types are included in the appendix.<br>→ Chapter 4.1 "Calibration setups for further CSM measurement modules" |

### 2.4.1 Calibration setup for AD CAN measurement modules

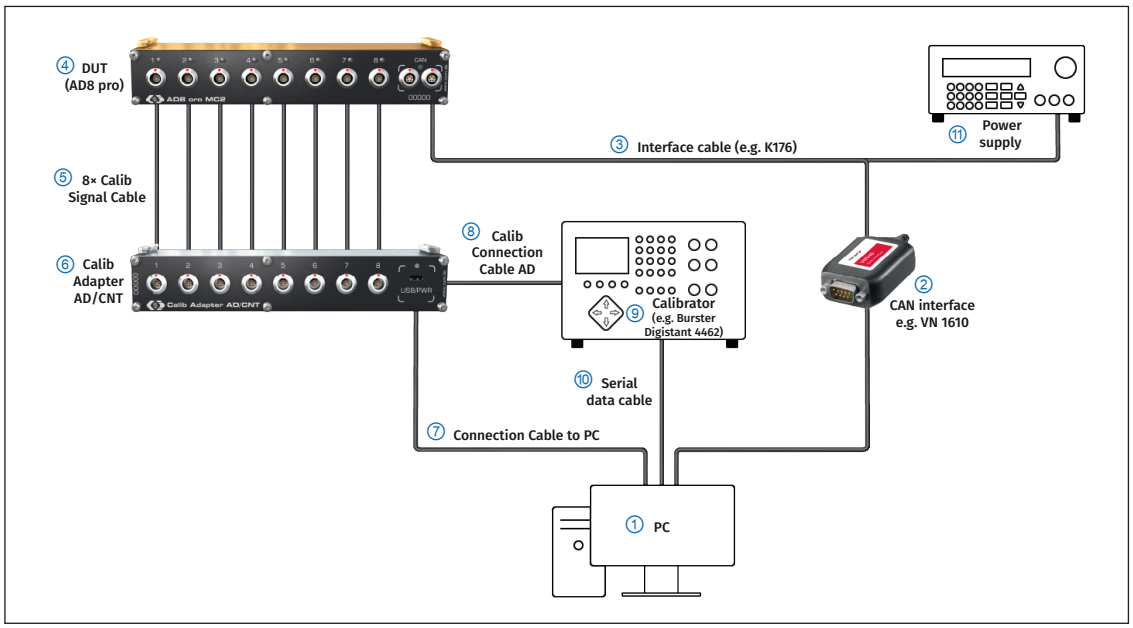


Fig. 2-1: Model setup for the calibration of AD CAN measurement modules

- Connect the interface cable K176 ③ with the DUT ④.
- Connect the opposite end of the interface cable ③ to the CAN interface ②.
- Connect the CAN Interface ② to the PC ①.
- Connect the signal cables (Calib Signal Cable) ⑤ for the transmission of the calibration signals.
  - Insert the signal cables ⑤ into the measurement inputs of the DUT ④.
  - Then connect the opposite ends of the signal cables ⑤ to the corresponding signal outputs of the Calib Adapter AD/CNT ⑥.
- Connect the Calib Adapter AD/CNT ⑥ to the PC ① using the Connection Cable to PC ⑦.
- Connect the signal input of the Calib Adapter AD/CNT ⑥ to the calibrator ⑨ using the Calib Connection Cable AD ⑧.
- Connect the calibrator ⑨ to the PC ① using a serial data cable ⑩.
- Connect the banana plugs of the interface cable K176 ③ to the power supply ⑪.

### 2.4.2 Calibration setup for AD ECAT measurement modules

The calibration setup for AD ECAT measurement modules is very similar to the setup Calibration setup for AD CAN measurement modules. The layout for AD ECAT measurement modules differs in the following details:

- The CAN interface is replaced by an XCP-Gateway ③.
- The interface cable K176 is replaced by the following cables:
  - a K400 connection cable ④ for connecting the DUT ⑤ to the XCP-Gateway ③
  - a K420 interface cable ② for connecting the XCP-Gateway ③ to the PC ① and the power supply ⑫

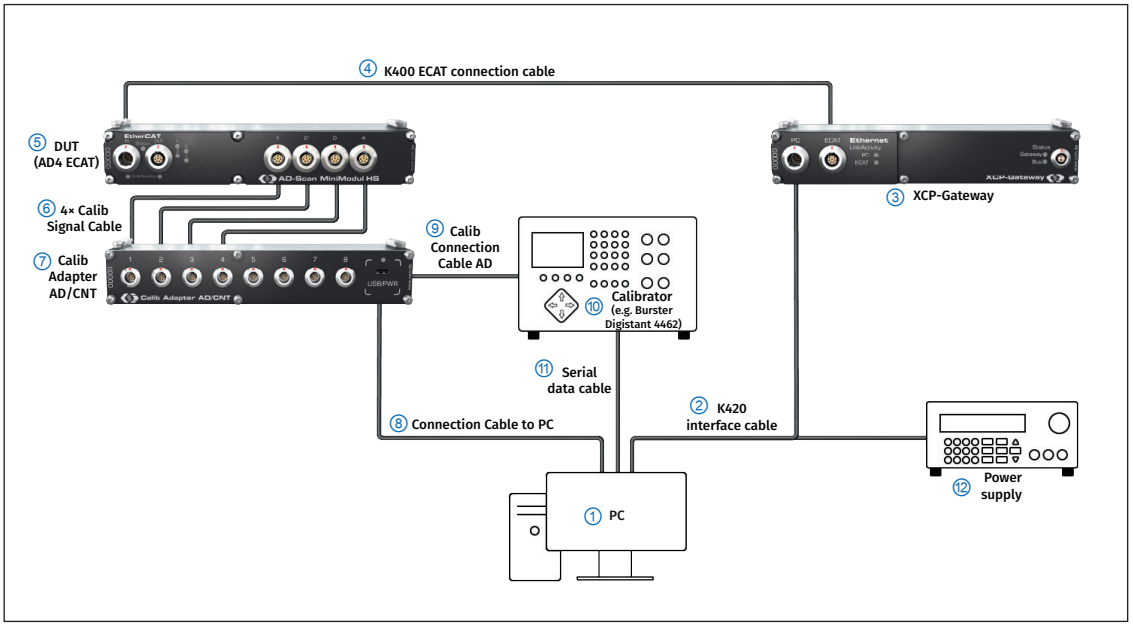


Fig. 2-2: Model setup for the calibration of AD ECAT measurement modules

- Connect the interface cable K400 ④ with the DUT ⑤.
- Connect the opposite end of the K400 connection cable ④ to the XCP-Gateway ③.
- Connect the XCP-Gateway ③ to the PC ① using the K420 interface cable ②.
- Connect the signal cables (Calib Signal Cable) ⑥ for the transmission of the calibration signals.
  - Insert the signal cables ⑥ into the measurement inputs of the DUT ⑤.
  - Then connect the opposite ends of the signal cables ⑥ to the corresponding signal outputs of the Calib Adapter AD/CNT ⑦.
- Connect the Calib Adapter AD/CNT ⑦ to the PC ① using the Connection Cable to PC ⑧.
- Connect the signal input of the Calib Adapter AD/CNT ⑦ to the calibrator ⑩ using the Calib Connection Cable AD ⑨.
- Connect the calibrator ⑩ to the PC ① using a serial data cable ⑪.
- Connect the banana plugs of the interface cable K420 ② to the power supply ⑫.

### 2.4.3 Calibration setup for CNT CAN measurement modules

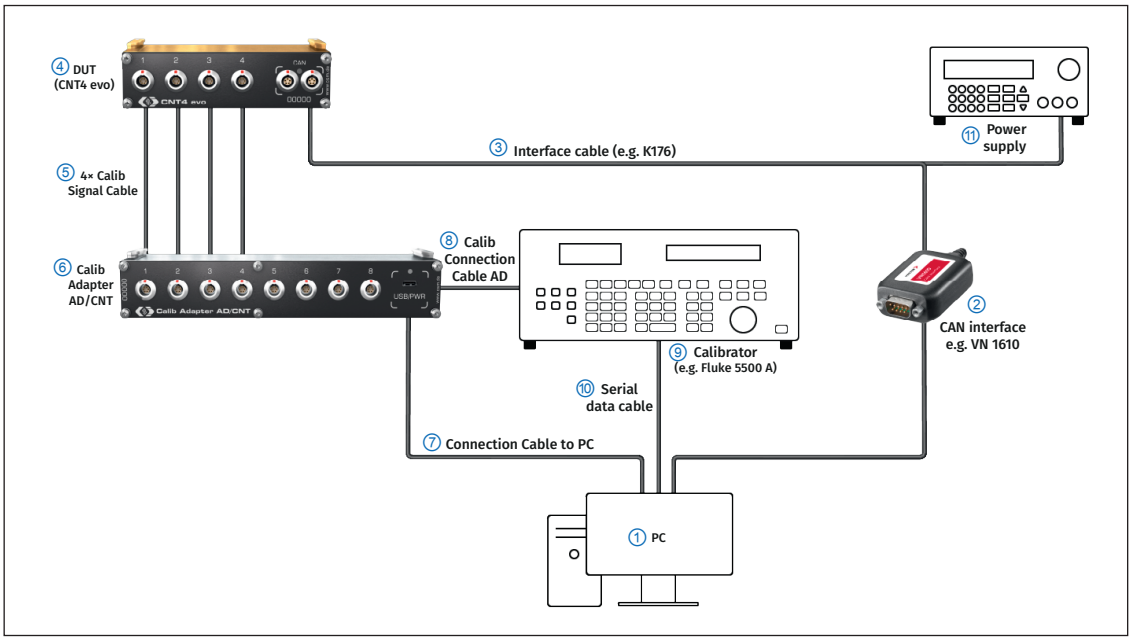


Fig. 2-3: Model setup for the calibration of CNT evo CAN measurement modules

- Connect the interface cable K176 ③ with the DUT ④.
- Connect the opposite end of the interface cable ③ to the CAN interface ②.
- Connect the CAN Interface ② to the PC ①.
- Connect the signal cables (Calib Signal Cable) ⑤ for the transmission of the calibration signals.
  - Insert the signal cables ⑤ into the measurement inputs of the DUT ④.
  - Then connect the opposite ends of the signal cables ⑤ to the corresponding signal outputs of the Calib Adapter AD/CNT ⑥.
- Connect the Calib Adapter AD/CNT ⑥ to the PC ① using the Connection Cable to PC ⑦.
- Connect the signal input of the Calib Adapter AD/CNT ⑥ to the calibrator ⑨ using the Calib Connection Cable AD ⑧.
- Connect the calibrator ⑨ to the PC ① using a serial data cable ⑩.
- Connect the banana plugs of the interface cable K176 ③ to the power supply ⑪.

### 2.4.4 Calibration setup for PT CAN measurement modules

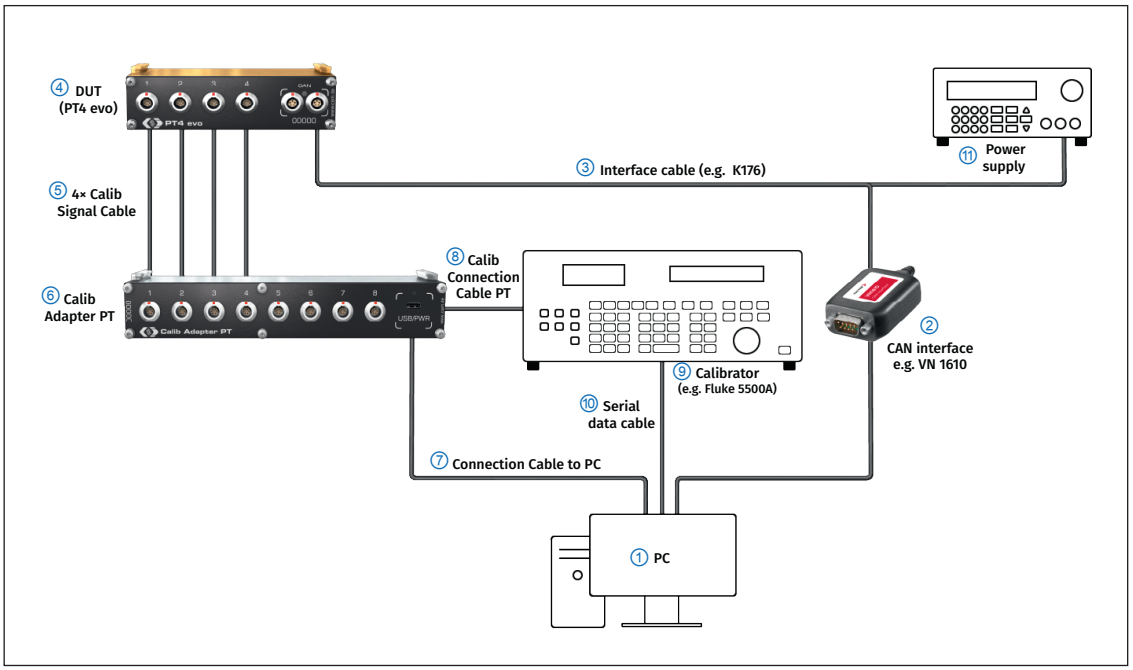


Fig. 2-4: Model setup for the calibration of PT CAN measurement modules

- Connect the interface cable K176 ③ with the DUT ④.
- Connect the opposite end of the interface cable ③ to the CAN interface ②.
- Connect the CAN Interface ② to the PC ①.
- Connect the signal cables (Calib Signal Cable) ⑤ for the transmission of the calibration signals.
  - Insert the signal cables ⑥ into the measurement inputs of the DUT ④.
  - Then connect the opposite ends of the signal cables ⑤ to the corresponding signal outputs of the Calib Adapter PT ⑥.
- Connect the Calib Adapter PT ⑥ to the PC ① using the Connection Cable to PC ⑦.
- Connect the signal input of the Calib Adapter PT ⑥ to the calibrator ⑨ using the Calib Connection Cable PT ⑧.
- Connect the calibrator ⑨ to the PC ① using a serial data cable ⑩.
- Connect the banana plugs of the interface cable K176 ③ to the power supply ⑪.

### 2.4.5 Calibration setup for STG CAN measurement modules

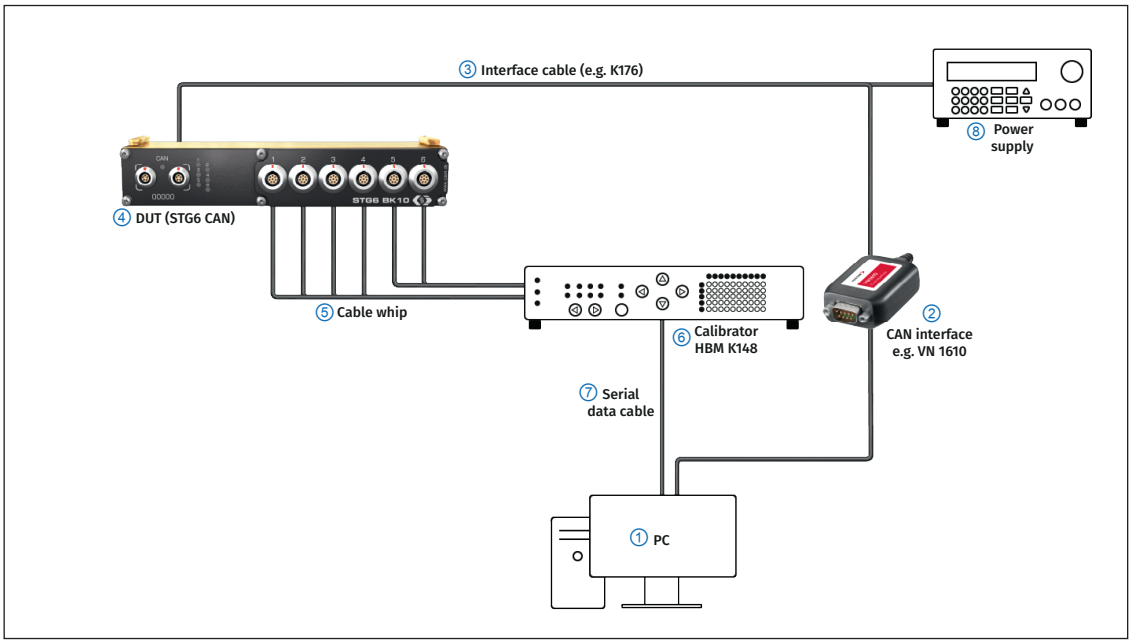


Fig. 2-5: Model setup for the calibration of STG CAN measurement modules

- Connect the interface cable K176 ③ with the DUT ④.
- Connect the opposite end of the interface cable ③ to the CAN interface ②.
- Connect the CAN Interface ② to the PC ①.
- Connect the signal cables of the cable whip ⑤ for transmitting the calibration signals.[3]
  - Insert the signal cables of the cable whip ⑤ into the measurement inputs of the DUT ④.
  - Plug the opposite ends of the cable whip ⑤ into the inputs of the calibrator ⑥.
- Connect the calibrator ⑥ to the PC ① using a serial data cable ⑦.
- Connect the banana plugs of the interface cable K176 ③ to the power supply ⑧.

3 A Calib Signal Cable for STG modules (CAN and ECAT) consists of two cable harnesses with four and two signal cables, respectively.

### 2.4.6 Calibration setup for STG ECAT measurement modules

The setup for calibrating STG ECAT measurement modules is very similar to the Calibration setup for STG CAN measurement modules. The layout for STG ECAT measurement modules differs in the following details:

- The CAN interface is replaced by an XCP-Gateway ③.
- The interface cable K176 is replaced by the following cables:
  - a K400 connection cable ④ for connecting the DUT ⑤ to the XCP-Gateway ③
  - a K420 interface cable ② for connecting the XCP-Gateway ③ to the PC ① and the power supply ⑨

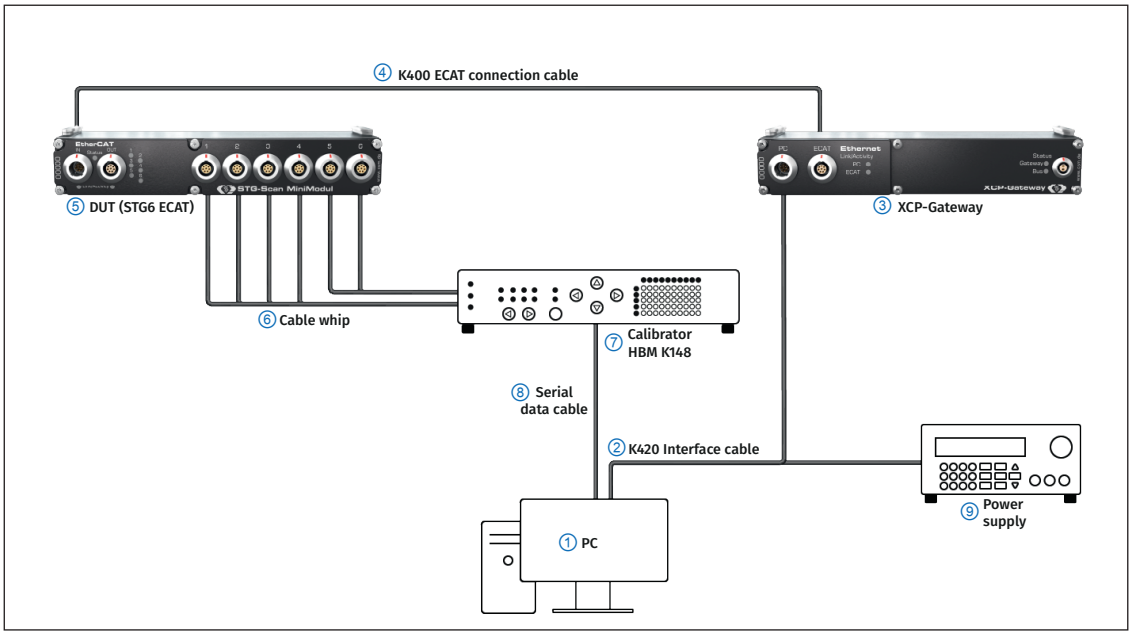


Fig. 2-6: Model setup for the calibration of STG ECAT measurement modules

- Connect the K400 connection cable ④ with the DUT ⑤.
- Connect the opposite end of the K400 connection cable ④ to the XCP-Gateway ③.
- Connect the XCP-Gateway ③ to the PC ① using the K420 interface cable ②.
- Connect the signal cables of the cable whip ⑥ for transmitting the calibration signals.[4]
  - Insert the signal cables of the cable whip ⑥ into the measurement inputs of the DUT ⑤.
  - Plug the opposite ends of the cable whip ⑥ into the inputs of the calibrator ⑦.
- Connect the calibrator ⑦ to the PC ① using a serial data cable ⑧.
- Connect the banana plugs of the interface cable K420 ② to the power supply ⑨.

4 A Calib Signal Cable for STG modules (CAN and ECAT) consists of two cable harnesses with four and two signal cables, respectively.

### 2.4.7 Calibration setup for TH CAN measurement modules

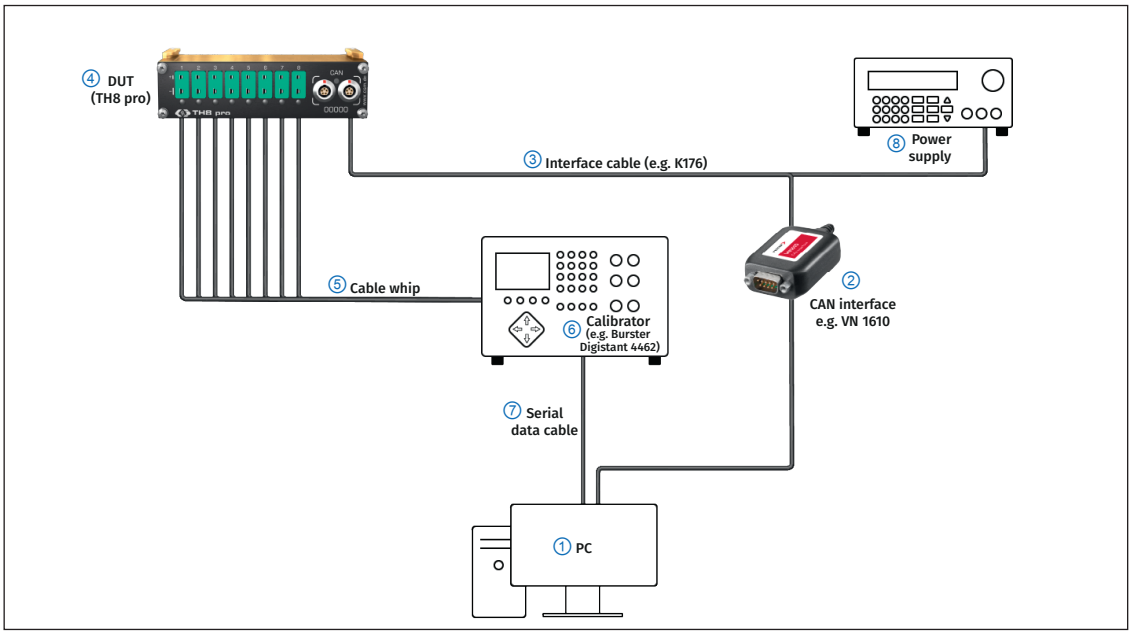


Fig. 2-7: Model setup for the calibration of TH CAN measurement modules

- Connect the interface cable K176 ③ with the DUT ④.
- Connect the opposite end of the interface cable ③ to the CAN interface ②.
- Connect the CAN Interface ② to the PC ①.
- Connect the cable whip ⑤ for the transmission of the calibration signals.
  - Insert the signal cables of the cable whip ⑤ into the measurement inputs of the DUT ④.
  - Connect the opposite end of the cable whip ⑤ to the calibrator ⑥.
- Connect the calibrator ⑥ to the PC ① using a serial data cable ⑦.
- Connect the banana plugs of the interface cable K176 ③ to the power supply ⑧.

| | |
|---|---|
| i | For TH CAN measurement modules, there are only cable whips for eight measurement channels. Therefore, the calibration of a TH CAN measurement module with 16 channels is divided into two steps. After the calibration of channels 1 to 8 has been successfully completed, the signal cables of the cable whip have to be plugged into the measurement inputs of channels 9 to 16. CSMcalibrate guides the user through the necessary steps. |

| | |
|---|---|
| i | For certain calibrators, such as the **Burster Digistant 4462**, a reference junction (adapter) for thermocouples is required in order to connect a cable whip. |

## 2.5 Calibrating an AD CAN measurement module

This chapter describes the calibration of an AD CAN measurement module, including a check of the sensor supply.

| | |
|---|---|
| i | Some **AD** and **HV AD (LV)** measurement modules provide a sensor supply. For these modules, the sensor supply can be optionally checked in the course of the calibration process. |

☞ Start CSMcalibrate and log in (→ **chapter 3.5 "User management and login"**).

⇨ The start screen opens.

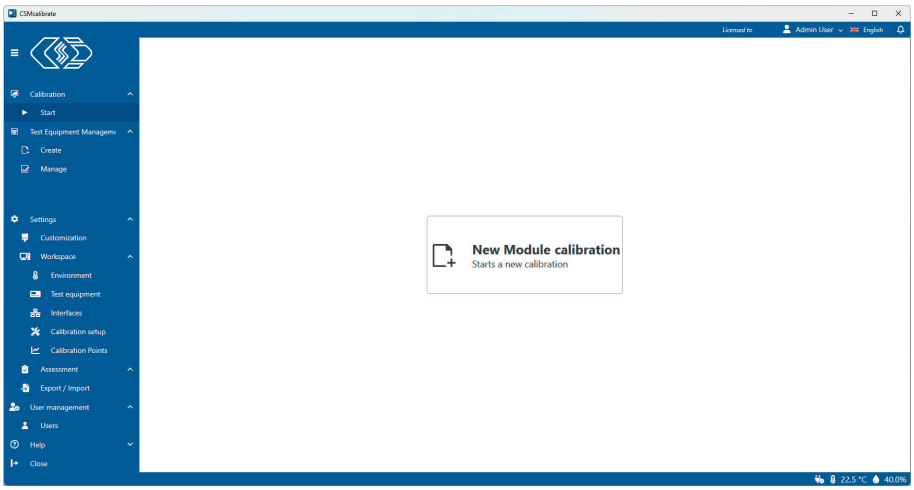


Fig. 2-8: CSMcalibrate start screen

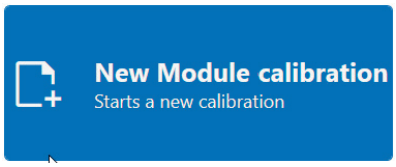


Fig. 2-9: **New module calibration** button

☞ Click on **New module calibration**.

⇨ The window **Article number** opens.

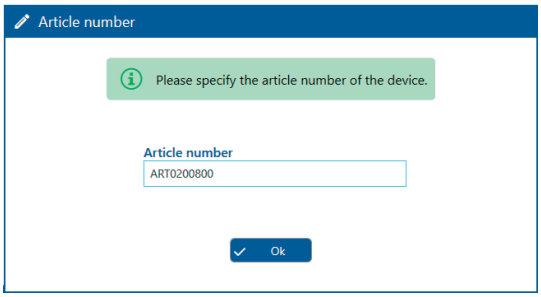


Fig. 2-10: Enter the article number of the DUT

☞ Enter the article number of the DUT in the **Article number** field and confirm with **OK**.[5]

⇨ The **Workflow overview** window opens.

5 If the DUT has been calibrated before, the article number will be retrieved from the database and displayed automatically.

| | |
|---|---|
| i | If there is more than one measurement module available, the **Select module** selection menu is displayed in the **Workflow overview** window, listing all the measurement modules integrated in the calibration setup. The device to be tested has to be selected from this list. |

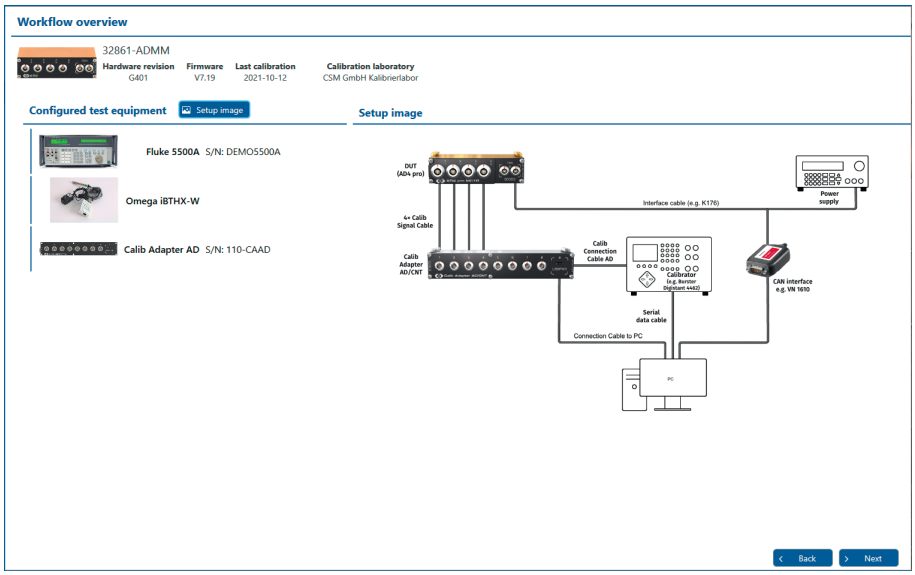


Fig. 2-11: **Workflow overview** window

- In the upper section of the **Workflow overview** window, the DUT is displayed along with details on its hardware revision, firmware revision, last calibration date, and the laboratory that performed the calibration.
- The **Configured test equipment** section lists the calibrator and other test equipment used for calibration.
- Click the **Connection Diagram** button to display the calibration setup for the module type to be calibrated (see also chapter 2.4 "Calibration setups for CSM measurement modules").
- In the **Options** section, a sensor power supply check can be optionally selected if the DUT is equipped with this feature.

| | |
|---|---|
| i | To check the sensor supply of the relevant AD/HV AD modules, the corresponding option has to be enabled both in the **Workflow overview** (Fig. 2-11) and in the **Calibration setup** menu. |

☞ Check the details, then click on **Next** (Fig. 2-11).

⇨ The start screen for the calibration process opens.

⇨ The calibration process will be started.

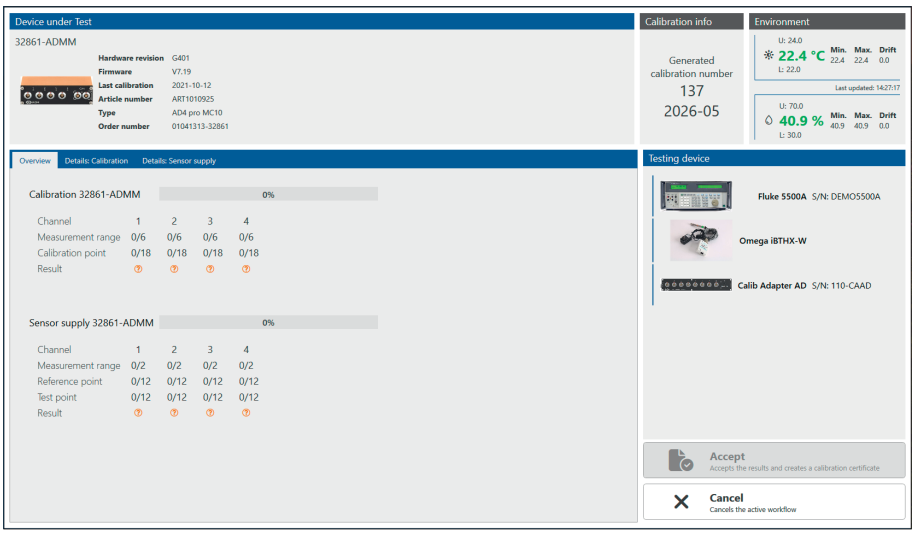


Fig. 2-12: Start screen for the calibration with subsequent test of the sensor supply

## Overview of calibration start screen (Fig. 2-12)

- **Device under Test** – This section displays information on the device under test (HW revision, FW revision and the date of the previous calibration).
- **Calibration info** – This field displays a number that was automatically assigned to the calibration process. This number will also be used for the calibration certificate.
- **Environment** – This info box displays the ambient temperature and relative humidity at the calibration location. To have these values displayed, the following settings have to be configured:
  - In the **Equipment** section of the **Test equipment** menu, the transmitter measuring the temperature and the relative humidity has to be enabled and an Internet connection to this transmitter has to be established.
  - In the **Environment** menu, the **Monitoring** option has to be enabled.

  If these options are not enabled, the Environment info box will be hidden as no values for temperature and relative humidity can be displayed.
- **Test device** – This section of the start screen displays the calibrator that is used for the calibration process and further testing equipment.[6]
- **Overview** – This tab shows the green process bar indicating the progress of the calibration process and, if applicable, the check of the sensor excitation.

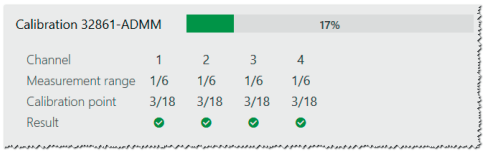


Fig. 2-13: Calibration process

⇨ If the green process bar indicates "100%", the calibration process has been successfully completed. If all calibration points are within the tolerance range, the calibration process has been successfully completed. In the **Result** line, this is indicated by a green symbol ✅ for each calibrated channel (Fig. 2-13).

6 Changes to the calibration setup or the selection of the test equipment can be made in section **Settings | Workspace | Calibration setup** or **Test equipment**. Administrator rights are required to access these settings. See chapter 3.5.2 "User management".

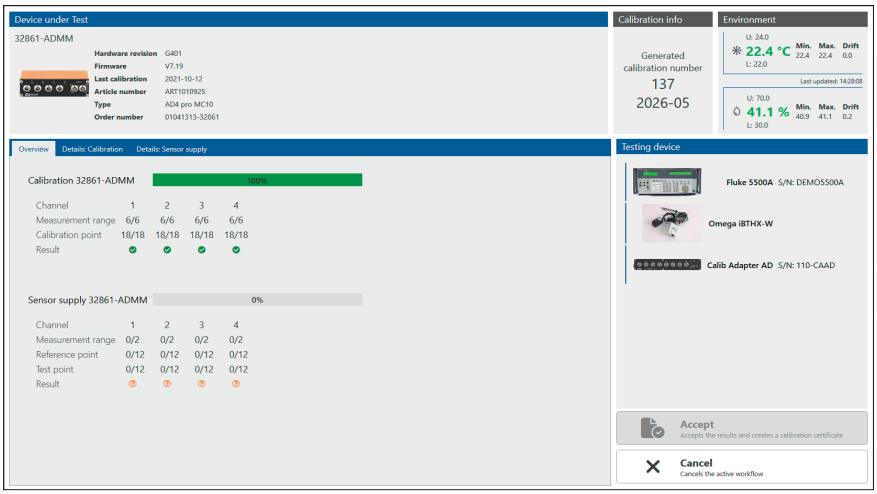


Fig. 2-14: Calibration process successfully completed

⇨ After a successful completion of the calibration process, the sensor supply check will start automatically.

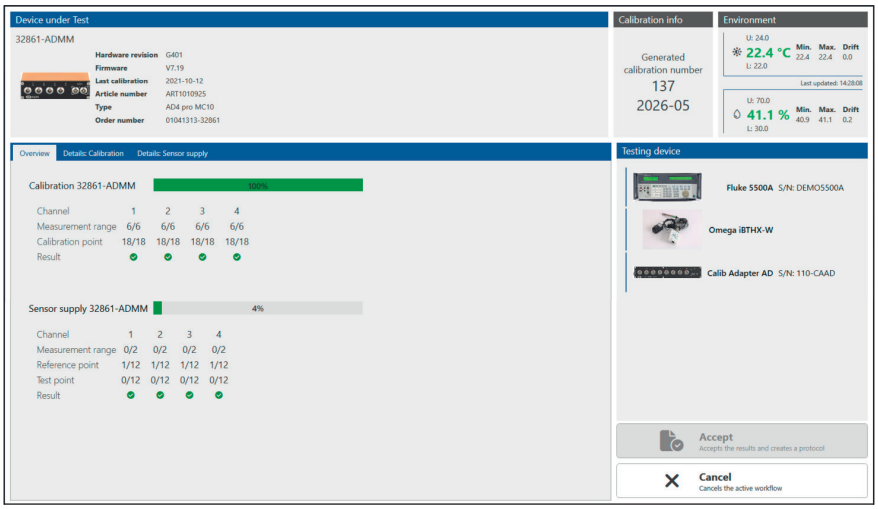


Fig. 2-15: Checking the sensor supply

⇨ If the green process bar in section **Overview | Sensor supply** shows "100%", the verification process has been successfully completed. If the test was successfully completed, this is indicated in the **Result** line with a green symbol ✅ for each channel tested (Fig. 2-15).

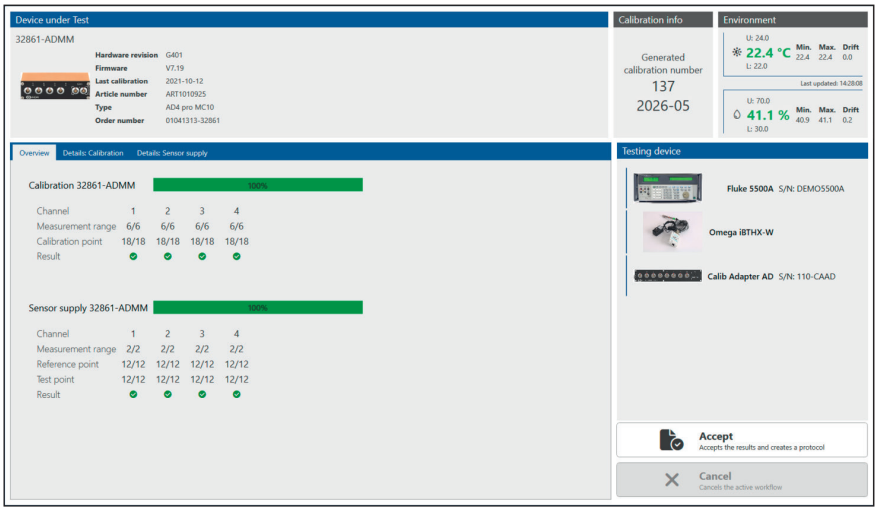


Fig. 2-16: Sensor supply check completed

## 2.5.1 Information on calibration process and sensor supply test

The **Details: Calibration** tab contains detailed information on the calibration process.

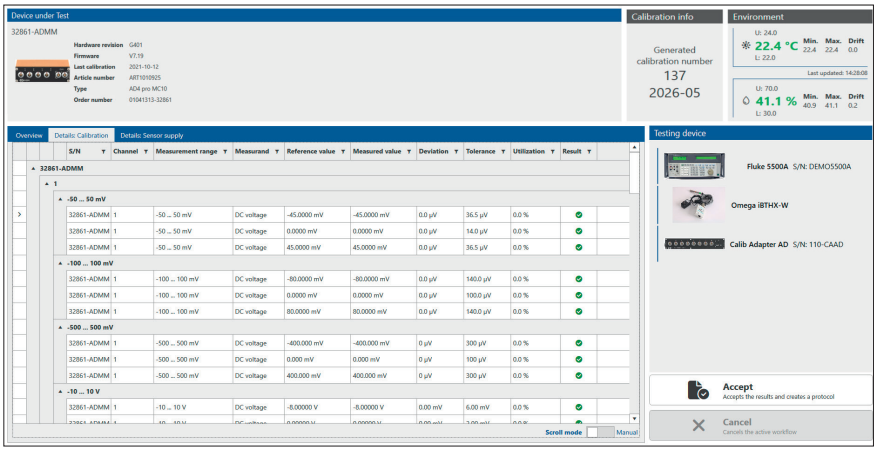


Fig. 2-17: Details on the calibration process

The **Details: Sensor supply** tab contains detailed information on the sensor supply test.

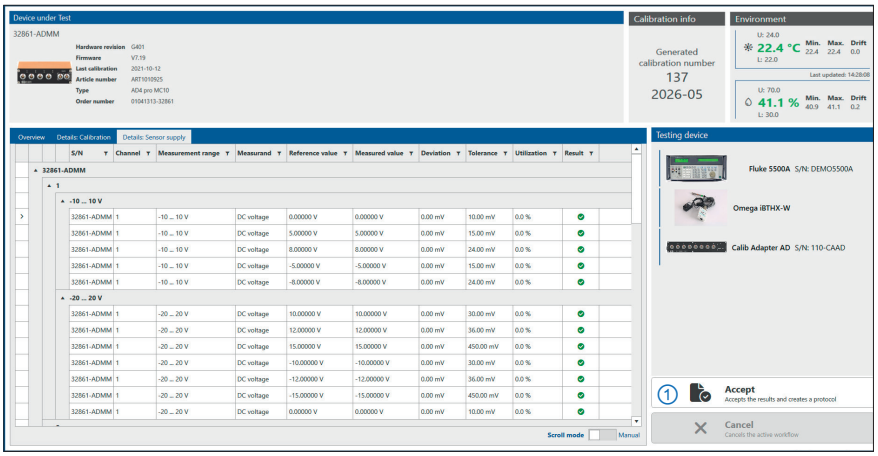


Fig. 2-18: Detailed information on the sensor supply test

### 2.5.2 Finalize the calibration and testing process and create the calibration certificate

☞ To complete the process, click on **Accept** (Fig. 2-18, ①) to create the calibration protocol.

⇨ The **Customization** form opens.

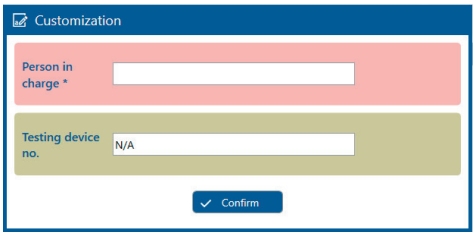


Fig. 2-19: **Customization** form

⇨ The **Person in charge** field displays the name of the person currently logged in.

⇨ Entering the calibrator's test equipment number in the **Testing device no.** field is optional.

☞ Click on **Confirm**.

⇨ The calibration certificate will be processed.

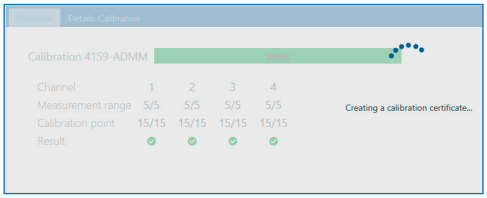


Fig. 2-20: Progress bar calibration certificate

⇨ By default, the calibration certificate opens automatically[7] in a separate window.[8]

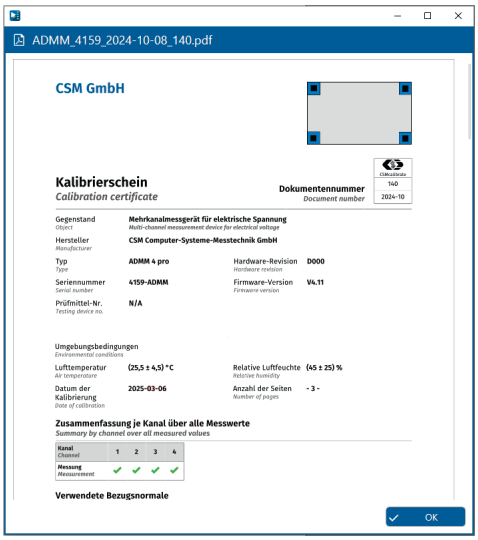


Fig. 2-21: Calibration certificate (sample)

☞ Click on **OK** to close the display of the calibration certificate.

⇨ The CSMcalibrate start screen (Fig. 2-8) opens again.

---

7 The automatic display of the calibration certificate can be disabled. For more information, see chapter 3.4.2.1 "Output", section "Calibration Certificate Preview".

8 Calibration certificates are by default output as PDF files. To be able to open calibration protocols, a program such as the Adobe Acrobat Reader is required on the PC.

# 3 Program Menu

## 3.1 Design and structure of the user interface

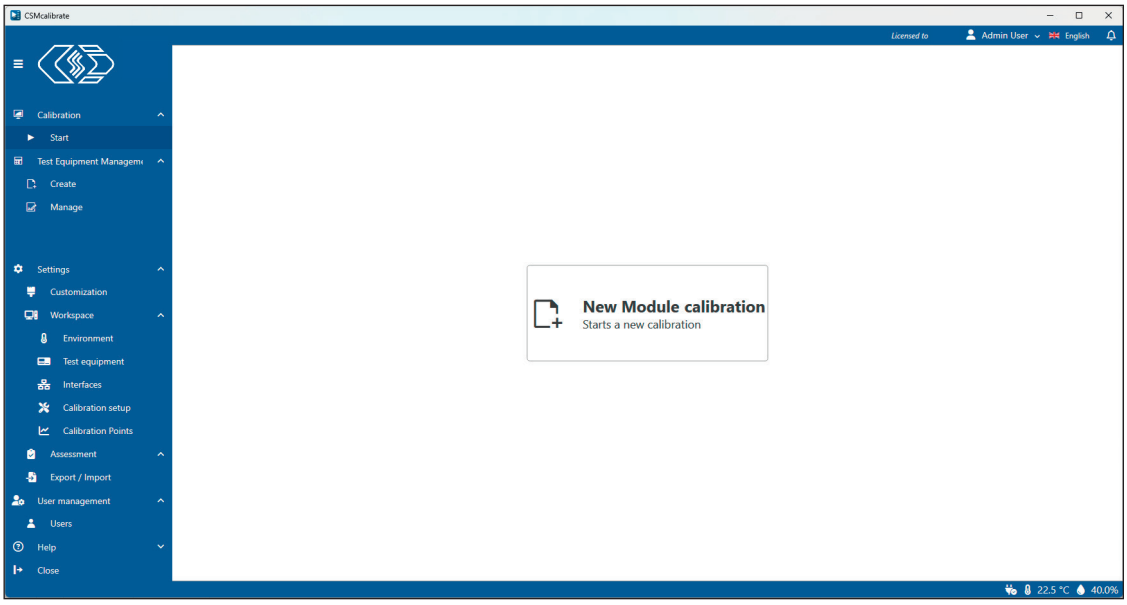


Fig. 3-1: User interface CSMcalibrate

### 3.1.1 Main menu

The main menu of CSMcalibrate is arranged as a vertical navigation bar on the left-hand side of the user interface. This navigation bar can be hidden and displayed again as required using the icon button to the left of the company logo. For better orientation, the individual menu items are marked with unique icons.

The following menu items are arranged in the main menu:

- **Calibration** – This menu item contains the Start button for launching the calibration process.
- **Manage Test Equipment** – This menu contains options for managing and recording test equipment-related master data.
- **Settings** – This menu contains options for customizing the calibration certificate, managing interfaces, configuring calibration setups, setting evaluation/tolerance limits for DUTs, and an export and import function for transferring database data.
- **User management** – This menu contains information on user management, user account settings and login.
- **Help** – Here you will find information on licensing (license updates), the software and database versions used, and how to perform database updates.

| | |
|---|---|
| i | Administrator rights are required to access the contents of the menus **Test Equipment Management** and **Settings**, and the **Update** section.<br>→ Chapter 3.5.2 "User management" |

### 3.1.2 Displaying ambient temperature and relative humidity

The values for the ambient temperature and relative humidity at the calibration setup be displayed at the bottom right of the status bar.

Fig. 3-2: Display of temperature and relative humidity at the calibration station

| | |
|---|---|
| i | The display is disabled by default. It can be enabled via the menus **Environment** and **Test equipment**. |

## 3.2 Calibration

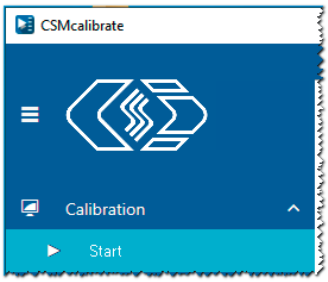


Fig. 3-3: **Calibration** menu

**Start** calls up the **New Calibration** button. The **New Calibration** button is automatically displayed after launching the program (Fig. 1-3).

| | |
|---|---|
| i | Example of application for the **Start** option<br>☞ Use the **Start** option to go directly to the **New module calibration** button from any menu (e.g. **Workspace \| Test Equipment** or **Workspace \| Calibration setup**). |

## 3.3 Manage Test Equipment

The **Manage Test Equipment** menu contains the following menu items:

- **Create**
- **Manage**

The test equipment management is used to ensure and maintain the quality and operational readiness of test equipment. The information stored in test equipment management is also included in the calibration certificate. This provides the means to trace which standard was used to perform a calibration.

| | |
|---|---|
| i | Administrator rights are required to access the contents of the menus **Test Equipment Management**, **Settings** and **Update**.<br>→ Chapter 3.5.2 "User management" |

### 3.3.1 Create

The table in the **Create** menu provides a list of the currently available test equipment (calibrators). The table also contains various information on the status of the test equipment (calibration date, next calibration date, etc.).

**Test equipment > Create new test equipment**

Test equipment overview

| Model | Serial number | Test equipment number | Test equipment status | Calibration status | Person in charge of test equipment | Location | Creation date | Calibration interval | Next calibration (scheduled) |
|---|---|---|---|---|---|---|---|---|---|
| **Fluke 5500A** | | | | | | | | | |
| Fluke 5500A | DEMO5500A | DEMO5500A | Active | calibrated and ready for use | | DemoDepartment | 2024-03-19 | 3 Years | 2027-03-18 |
| **Burster Digistant 4462** | | | | | | | | | |
| Burster Digistant 4462 | DEMO4462 | DEMO4462 | Active | calibrated and ready for use | | DemoDepartment | 2024-03-20 | 3 Years | 2027-03-19 |
| **Burster RTD Simulator 4530** | | | | | | | | | |
| Burster RTD Simulator 4530 | DEMO4530 | DEMO4530 | Active | calibrated and ready for use | | DemoDepartment | 2024-03-20 | 3 Years | 2027-03-19 |
| **Burster Digistant 4422** | | | | | | | | | |
| Burster Digistant 4422 | DEMO4422 | DEMO4422 | Active | calibrated and ready for use | | DemoDepartment | 2024-03-20 | 3 Years | 2027-03-19 |
| **Fluke 5522A** | | | | | | | | | |
| Fluke 5522A | DEMO5522A | DEMO5522A | Active | calibrated and ready for use | | DemoDepartment | 2024-03-20 | 3 Years | 2027-03-19 |
| **Burster Digistant 4463** | | | | | | | | | |
| Burster Digistant 4463 | DEMO4463 | DEMO4463 | Active | calibrated and ready for use | | DemoDepartment | 2024-03-20 | 3 Years | 2027-03-19 |
| **Tektronix AFG 3021C** | | | | | | | | | |
| Tektronix AFG 3021C | DEMOAFG3021 | DEMOAFG3021 | Active | calibrated and ready for use | | DemoDepartment | 2024-06-20 | 3 Years | 2027-03-19 |
| **Fluke 5502E** | | | | | | | | | |
| Fluke 5502E | DEMO5502E | DEMO5502E | Active | calibrated and ready for use | | DemoDepartment | 2024-09-04 | 3 Years | 2027-03-19 |

Fig. 3-4: Table **Test equipment overview**

It is also possible to add additional test equipment to the table and to edit existing test equipment entries.

#### 3.3.1.1 Adding new test equipment

☞ Go to the header of the **Test equipment overview** table (Fig. 3-4) and click on the "Add" icon button.

⇨ The **New test equipment** form opens.

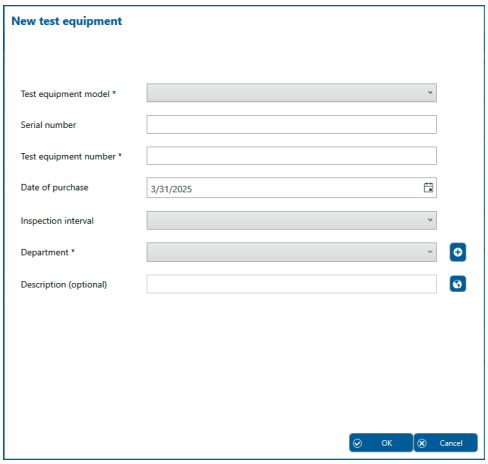


Fig. 3-5: **New test equipment** form

☞ Select the required test equipment from the **Test Equipment model** selection menu.

☞ Enter the **Test equipment number** for the new test equipment.

☞ Click on to the right of the **Department** selection menu to enter the department name.

⇨ The **New department** dialog opens.

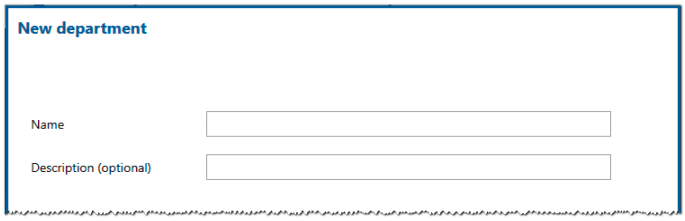


Fig. 3-6: **New department** dialog

☞ Enter the name of the department into the **Name** field.

☞ Click on **OK** to close the **New Department** dialog.

☞ Check the entries in the **New test equipment** form and confirm your entries with **OK**.

#### 3.3.1.2 Editing the entries of existing test equipment

☞ Mark the row of the test equipment in the table to be edited (e.g. Fluke 5500A → Fig. 3-4).

☞ Click on the "Edit" icon button in the header.

⇨ The **Edit test equipment** form opens.

☞ Edit the form.

☞ Click on **OK** to confirm the changes.

### 3.3.2 Manage

The table provides an overview of the validity of the calibrations for the available test equipment.

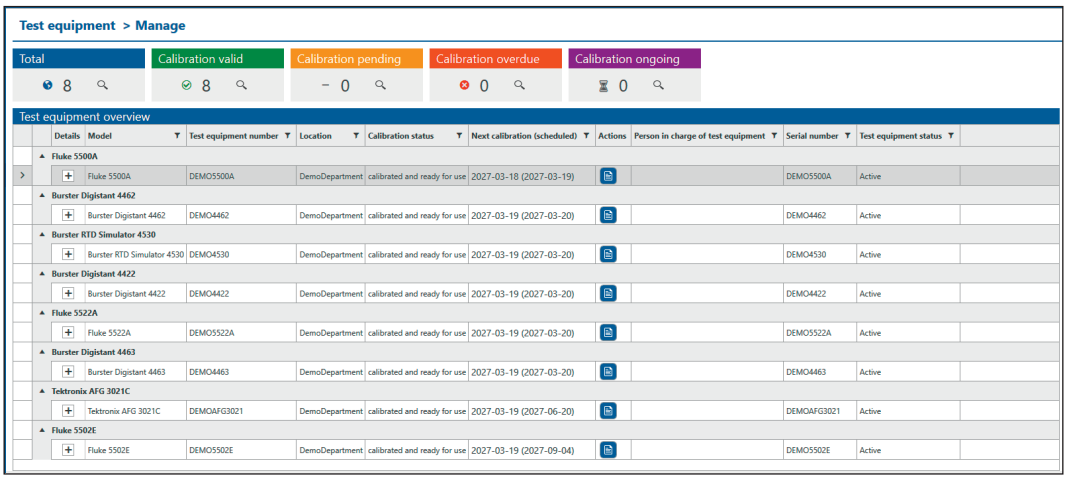


Fig. 3-7: Table **Test equipment overview**

This table also provides the option to assign new calibration certificates to the calibrators and to call up current calibration certificates.

### 3.3.2.1 Entering the calibration data for a calibrator

☞ Go to the table row of the calibrator (e.g. Burster Digistant 4463) to which you need to assign a calibration certificate and click on the "Calibration certificate" icon button.

⇨ The **Calibration certificate** page opens.

- The **Test equipment** section provides details on the test equipment.
- Details on the test equipment's calibration status can be found in the **Information** section.
- The data for the new calibration certificate is entered in the **Calibration certificate** section.

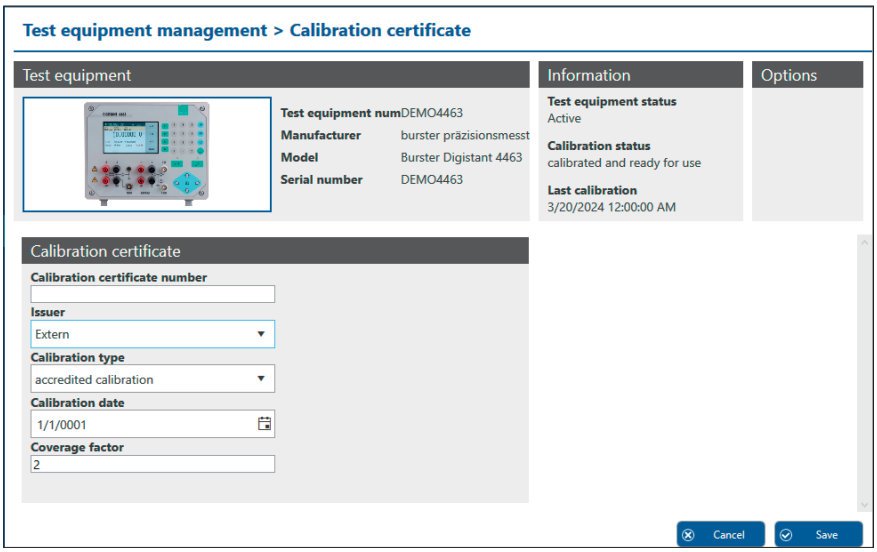


Fig. 3-8: **Calibration certificate** menu

☞ Enter the required data:

- Enter the number of the new calibration certificate into the field **Calibration certificate number**.
- Indicate in the **Issuer** section whether the calibrator was calibrated internally or externally.
- Select the type of calibration (e.g. "Accredited calibration") from the **Calibration type** selection menu.
- Enter the date of issue shown on the calibration certificate in the **Calibration date** field.

☞ Finally, click on **Save** in the lower right section of the window (Fig. 3-8).

### 3.3.2.2 View calibration certificate

☞ Open the table section of the required calibrator by clicking on the + icon in the **Details** column.

⇨ The table is expanded and the **Calibration certificates** submenu is displayed.

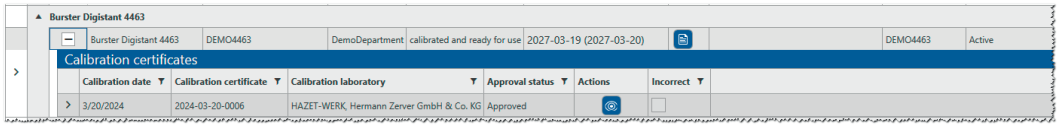


Fig. 3-9: **Test equipment overview** table, **Calibration certificates** submenu

☞ Click on the "View" icon button in the **Actions** column.

⇨ The **Calibration certificate** page with the data of the currently stored calibration certificate opens.

## 3.4 Settings

### 3.4.1 Overview

| | |
|---|---|
| i | Administrator rights are required to access the contents of the menus **Test Equipment Management**, **Settings** and **Update**.<br>→ Chapter 3.5.2 "User management" |

The **Settings** menu contains the following submenus:

- **Customization**
- **Workshop**
- **Assessment**
- **Import/Export**

#### Saving changes

On each page of the **Settings** menu, there are three buttons in the footer area at the lower right. These buttons are designed to store or discard changes made, or to restore the default settings.

The buttons **Store** and **Discard** will be enabled as soon as any changes are made on the page.

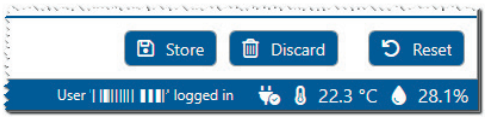


Fig. 3-10: Menu buttons

| NOTE! | |
|---|---|
| | Any changes made must be saved in the same menu. If changes are not saved, a message will be displayed when leaving the menu, reminding the user that **the changes will be lost if they are not saved**. |

## 3.4.2 Customization

The **Customization** menu consists of the sections **Calibration certificate options** and **Sample document**.

The **Calibration certificate options** section, provides the means to edit the calibration certificate. This section contains the following menu items:

- **Output**
- **Header**
- **Title page**
- **Remarks**

The **Sample document** section shows a sample calibration certificate. The preview function provides the means to view the changes made in section **Calibration certificate options** in the calibration certificate.

### 3.4.2.1 Output

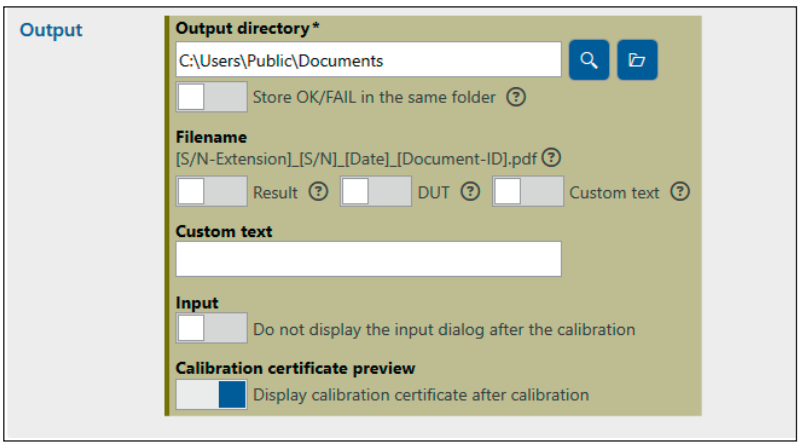


Fig. 3-11: **Calibration certificate options | Output**

- **Output directory**: customizable storage location for the calibration protocols. Clicking on the "Open" icon button opens the folder specified in the **Output directory** input field. The "active/inactive" switch provides the following functions:
  - "inactive": All calibration records ("OK" and "FAIL") will be stored in the folder specified in the **Output directory** input field.
  - "active": Calibration records with the status "FAIL" will be stored in a separate subfolder.
- **File name**: Options for naming the calibration protocols: The switches provide the following functions:
  - **Result** ("active"): The calibration status ("OK"/"FAIL") is added to the file name.
  - **DUT** ("active"): The test equipment number of the DUT is added to the file name.
  - **Custom text**: see input field **Custom text**
- **Custom text**: This option can be used to add further information to the file name of the calibration certificate. To use this option, the **Custom text** switch in the **File name** section has to be in the "active" position.
- **Input**: The switch position ("inactive"/"active") determines whether the **Customization** form (Fig. 2-19) is displayed after the calibration and test process has been completed. The form is by default displayed.
- **Calibration certificate preview**: After a calibration process has been successfully completed, the corresponding calibration protocol opens automatically. Switch off the **Calibration certificate preview** to disable the automatic opening of the calibration certificate.

### 3.4.2.2 Header

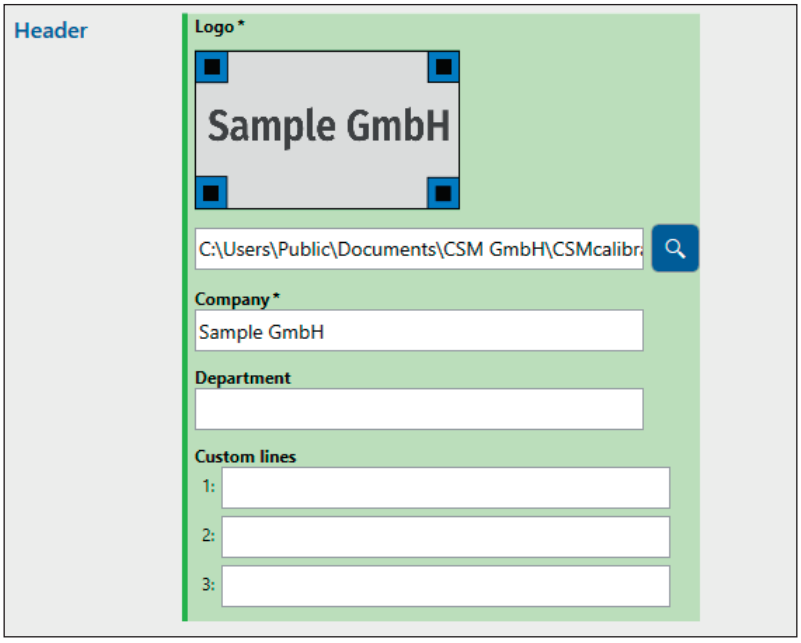


Fig. 3-12: **Calibration certificate options | Header**

- **Logo**: This is where you can specify the path for the logo (company logo) to be displayed in the calibration protocol. Image data in the formats *.jpeg, *.jpg and *.svg can be used.
- **Company**: Name/designation of the company issuing the calibration protocols
- **Department**: Name of the department responsible for the calibrations
- **Custom lines**: Additional comments (e.g. company address)

### 3.4.2.3 Title page

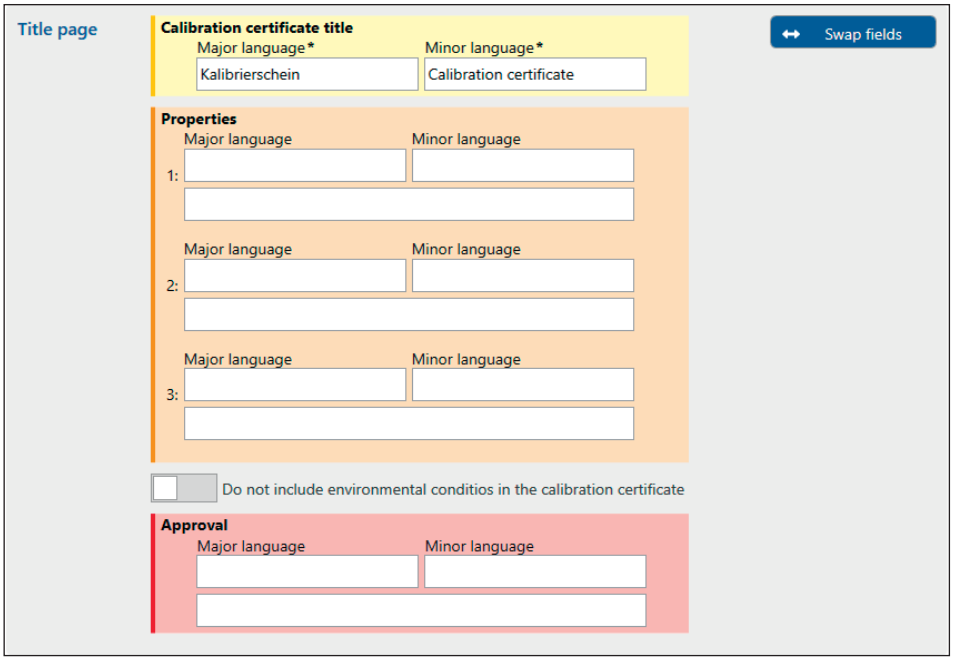


Fig. 3-13: **Calibration certificate options | Title page**

- **Calibration certificate title**: Title of the document (calibration certificate) in the main and the secondary language (e.g. German and English). The default texts are "Kalibrierschein" and "Calibration certificate" (Fig. 3-15).

- **Properties**: This is where customer-specific properties can be entered that have to be included in the calibration certificate (Fig. 3-15).
- When monitoring the environmental conditions manually (Fig. 3-16), the position of switch ① determines whether these conditions are included in the calibration certificate. This function is by default disabled.
- **Approval**: This is where the name of the person can be entered who will release the calibration certificates.

| | |
|---|---|
| i | By clicking **Swap Fields**, the user can swap the positions of the fields for the primary and secondary languages in the **Title Page** and **Notes** sections. |

### 3.4.2.4 Remarks

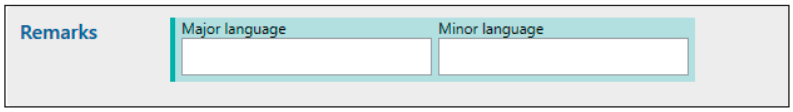


Fig. 3-14: **Calibration certificate options | Remarks**

- Notes on the calibration protocol in the main and secondary language

### 3.4.2.5 Sample document

The **Sample document** section shows a calibration certificate template. Content that may vary depending on user-defined information is highlighted in color (Fig. 3-15, left). The colors correspond to the colors of the input fields for user-defined information in the chapters 3.4.2.2 to 3.4.2.4.

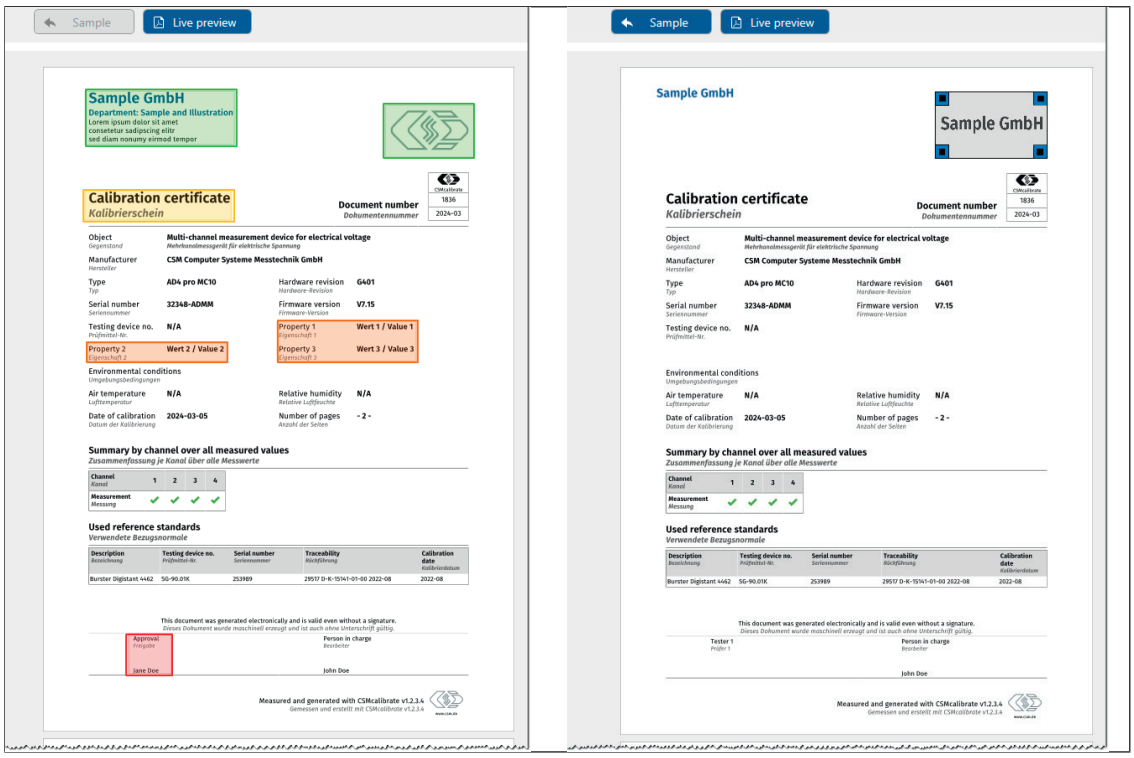


Fig. 3-15: **Sample document** (left), **Live preview** (right)

Clicking the **Live preview** button opens the preview version of the calibration certificate (Fig. 3-15, right), which may contain user-defined changes made according to the options described in the chapters 3.4.2.2 to 3.4.2.4. Clicking the **Sample** button displays the template of the calibration certificate again (Fig. 3-15, left).

## 3.4.3 Workspace

The **Workspace** menu contains the following submenus:

- **Environment**
- **Test equipment**
- **Interfaces**
- **Calibration setup**
- **Calibration points**

### 3.4.3.1 Environment

The reference ranges for ambient temperature and relative humidity of the calibration station are specified in the **Environment** menu. The **Monitoring** switch is used to specify whether the environmental parameters are monitored manually (default setting) or automatically.

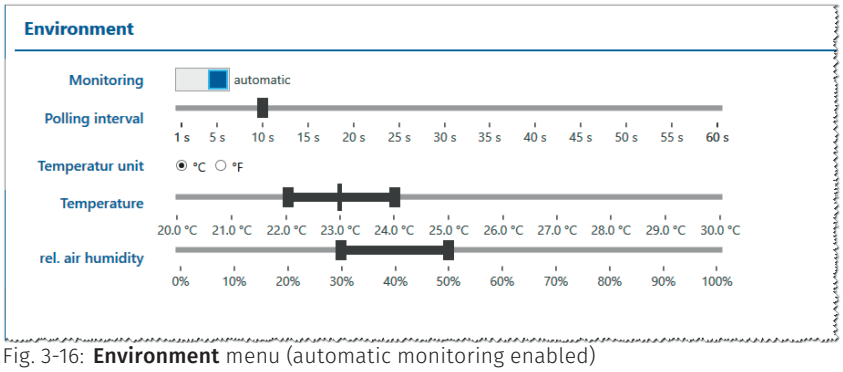


Fig. 3-16: **Environment** menu (automatic monitoring enabled)

- For automatic monitoring, the **Polling interval** specifies the interval at which the temperature and relative humidity values are retrieved.
- In the **Temperature unit** section, the user can choose between "°C" and "°F".
- The sliders in the **Temperature** and **rel. air humidity** sections are used to set the reference ranges that are relevant for calibration.
  - For manual monitoring (default setting), the user must ensure “manually”—that is, without the measured values from a sensor connected to the calibration software—that the environmental conditions correspond to the reference ranges specified in CSMcalibrate. It is the user’s responsibility to ensure this by using appropriate tools (e.g. an external sensor).
  - In section **Calibration certificate options | Title page** of the **Customization** menu, a switch can be used to specify whether the environmental conditions will be included in the calibration certificate.
  - During automatic monitoring, a sensor connected to the PC sends the values for ambient temperature and relative air humidity to the calibration software. If either value falls below or exceeds the specified ranges, a warning message in the **Calibration | Start** menu indicates that calibration cannot be performed under the current environmental conditions. The **New module calibration** button is disabled.

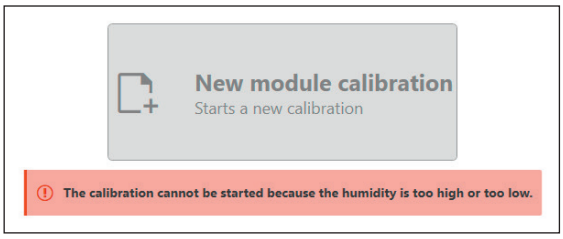


Fig. 3-17: Warning message: relative humidity values outside the reference range

| NOTE! | |
|---|---|
| | The sensor readings will only be transmitted to CSMcalibrate, if the sensor has also been enabled on the **Test equipment** page. |

### 3.4.3.2 Test equipment

The **Test equipment** submenu provides the means to verify the connections of calibrators and other test equipment to the PC on which the calibration software is installed. It is also possible to specify the connection parameters for the calibrators.

If the info box **Environment** (Fig. 2-13) is to be used for displaying the values for ambient temperature and relative humidity, the transmitter for transferring these values in the **Equipment** section (Fig. 3-18, ①) has to be enabled.

→ Chapter 3.4.3.1 "Environment"

Fig. 3-18: **Test Equipment** menu

### 3.4.3.3 Interfaces

The interfaces connected to the PC in the calibration setup are listed in the **Interfaces** section.

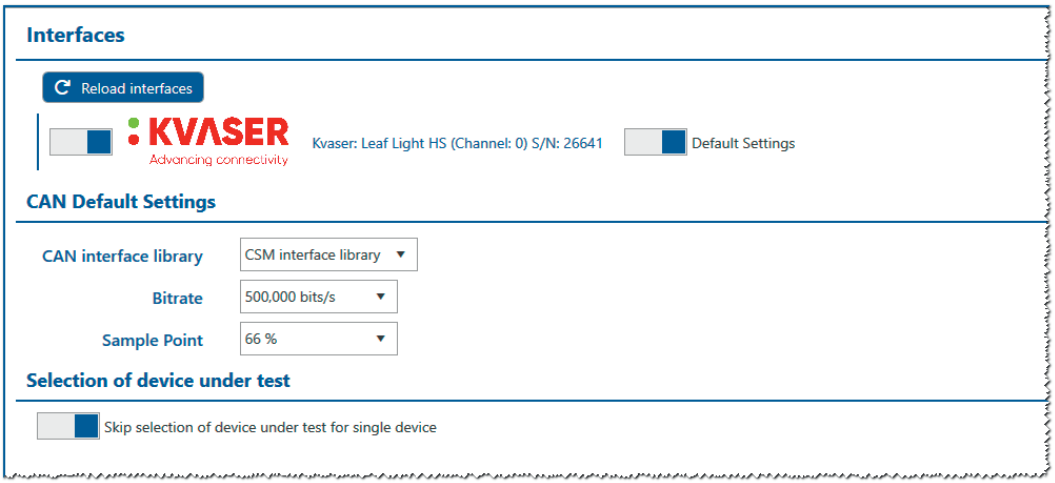


Fig. 3-19: **Interfaces** menu

If further interfaces are added to an existing calibration setup, the list of connected interfaces can be updated by clicking on the **Reload interfaces** (Fig. 3-19) button.

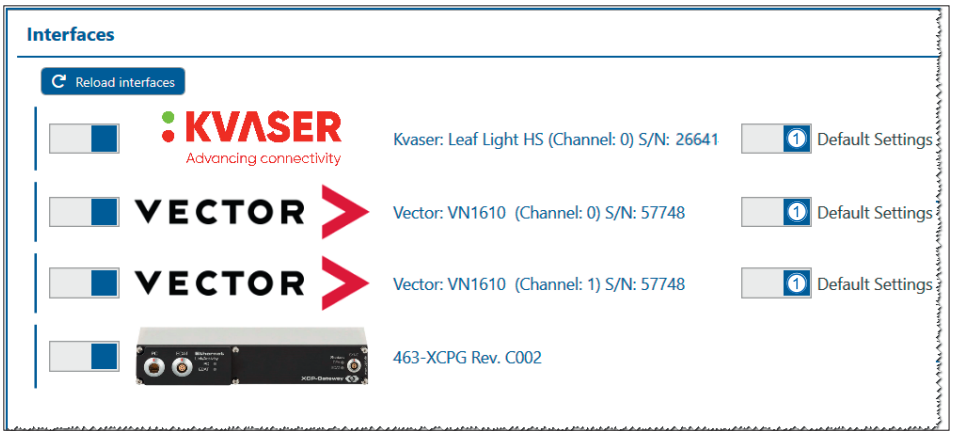


Fig. 3-20: Connected interfaces

Fig. 3-20 shows a selection of interfaces integrated into a calibration setup:

- Kvaser Leaf Light HS (CAN, 1 channel)
- Vector VN1610 (CAN, 2 channels)
- XCP-Gateway

If two or more CAN interfaces or CAN interfaces with more than one channel are available in the **Interfaces** section, it is possible to specify individual settings for each interface/interface channel. To do so, the position of the switch of the relevant CAN interface (Fig. 3-20, ①) has to be changed from **Default settings** to **Individual settings**. Fig. 3-21 shows the switch in position **Individual settings** with the interface- and channel-specific setting options.

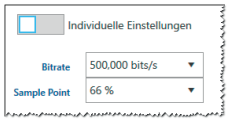


Fig. 3-21: Switch position **Individual settings**

An XCP-Gateway does not provide any customization options.

The interface settings used for the calibration process are defined in section **CAN Default Settings** (Fig. 3-19). The drop-down menu **CAN interface library** provides the options "CSM interface library" and "BOA (INCA 7.x)". The interface libraries are identical to those available in CSMconfig. Switching the CAN interface library takes effect only after the program is restarted.

### 3.4.3.4 Calibration setup

The test equipment that is used for calibrating the devices is specified in the **Calibration setup** menu.

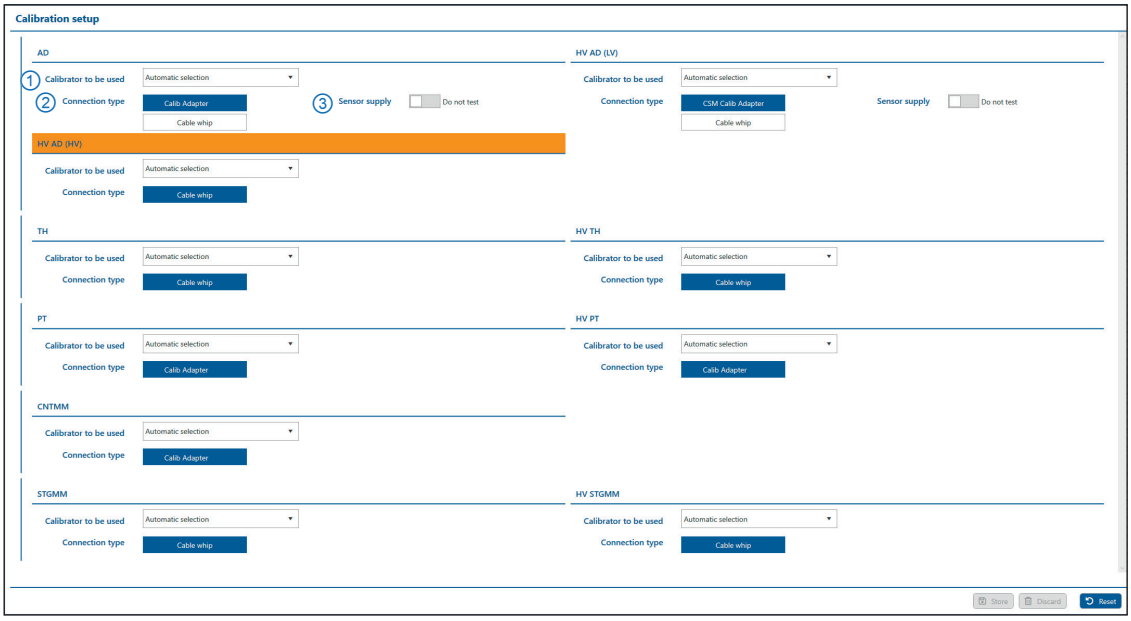


Fig. 3-22: **Calibration setup** menu

If more than one calibrator is available, the required calibrator can be selected directly from the **Calibrator to be used** drop-down menu (Fig. 3-22, ①). Alternatively, the option "Automatic selection" can be specified.

Depending on the type of module, that has to be calibrated, the **Connection type** (Fig. 3-22, ②) menu provides the following options:

- AD/HV AD (LV): Calib Adapter AD/CNT or cable whip
- HV AD (HV): cable whip
- CNTMM: Calib Adapter AD/CNT
- PT/HVPT: Calib Adapter PT
- STG/HV STG: cable whip
- TH/HV TH: cable whip

The module type "AD/HV AD (LV)" provides the option to test the sensor power supply of the device under test after calibration. To do so, the option **Sensor supply** (Fig. 3-22, ③) has to be enabled.

### 3.4.3.5 Calibration points

The calibration point table lists the standard calibration points associated with a specific part number (measurement module type).

☞ Enter the part number of the device under test in the **Part Number** ① field and press the "Enter" key.

⇨ The module type and hardware revision number are displayed in the **Calibration Points** ② field.

⇨ The calibration table with the standard calibration points is displayed below.

⇨ If additional measurement modules are affected by changes in the calibration point table, a list ③ of the relevant measurement modules is displayed on the right.

| | |
|---|---|
| i | If a measurement module cannot be assigned to a specific set of calibration points, the **Revision** field will be displayed to the right of the **Article Number** field.<br>☞ Enter the hardware revision number in the **Revision** field to assign the required set of calibration points to the measurement module. |

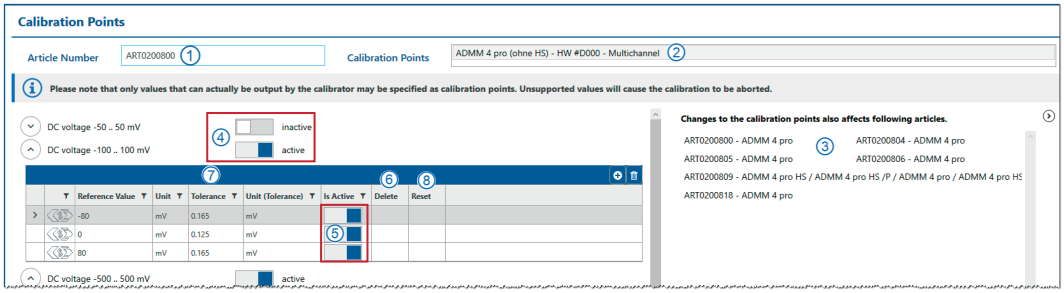


Fig. 3-23: **Calibration points** menu

- The default calibration points are marked with the CSM logo and can be disabled if necessary. They can, however, not be deleted.
- Use the "Add" icon button to add new, user-defined calibration points to the table (→ **Adding user-defined calibration points**).
  - These calibration points will not be marked with a CSM logo.
  - Like the standard calibration points, user-defined calibration points can be deactivated if necessary. Entire measurement ranges or individual calibration points can be deactivated or activated by using the switches ④ and ⑤.
  - Unlike standard calibration points, user-defined calibration points can also be deleted.
    - The "Delete" icon button in the header deletes all user-defined calibration points in a table.
    - User-defined calibration points can be deleted by using the "Delete" icon button in the **Delete** column ⑥.
- The **Tolerance** column ⑦ displays the standard tolerance values for the calibration points.
  - The tolerance values can be adjusted individually for both standard and user-defined calibration points (→ **Adjusting the tolerance values of calibration points**).
  - User-defined tolerance values for a standard calibration point are marked in the table with a modified CSM logo.
- By clicking the "Reset" icon button in the **Reset** column ⑧, the user-defined tolerance values will be reset to their default values.

### Adding user-defined calibration points

| NOTE! | |
|---|---|
| | Please note that only values that can be output by the calibrator may be used for the user-defined calibration points.<br>**The calibration process will be aborted if unsupported values are used.** |

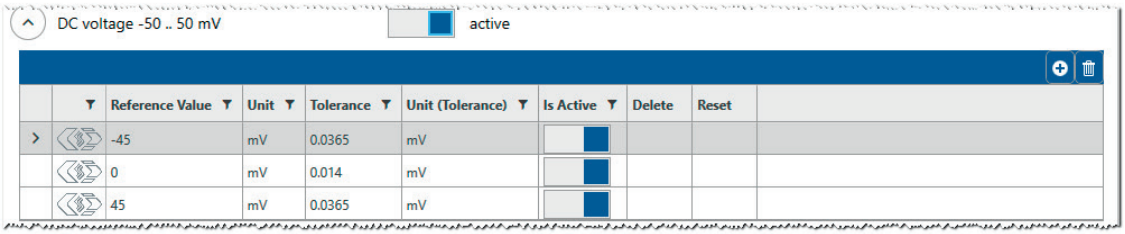


Fig. 3-24: Table with standard calibration points

☞ Click on the "Add" icon button in the table header.

⇨ A new row will be added to the table.

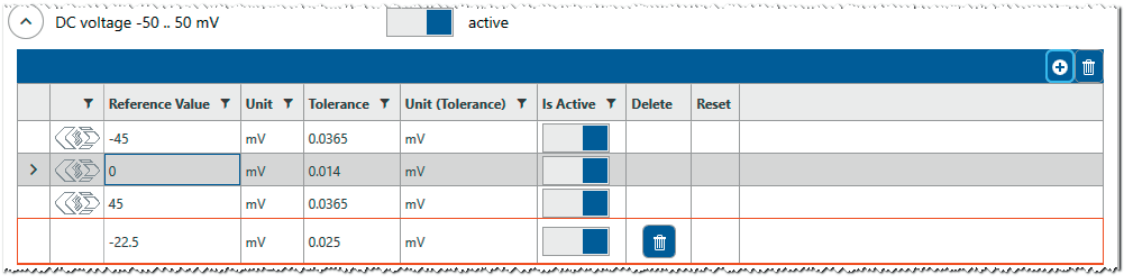


Fig. 3-25: User-defined calibration point has been added

⇨ The default value of the user-defined calibration point is displayed in the **Reference value** column. That reference value can be adjusted as required.[8]

| | |
|---|---|
| i | User-defined calibration points can be deleted by clicking on the icon button in the **Delete** column. |

8 The tolerance values for user-defined calibration points in the **Tolerance** column are calculated on the basis of a linear interpolation.

### Adjusting the tolerance values of calibration points

The values in the **Tolerance** column can be customized (e.g., to adjust to company-specific standards).

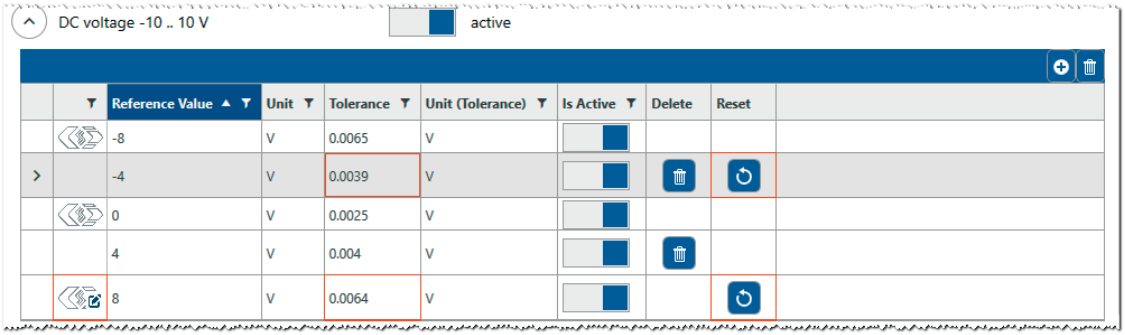


Fig. 3-26: Modified tolerance values

- Modified tolerance values of standard calibration points are marked with a modified CSM logo .

| | |
|---|---|
| i | By clicking the icon button in the **Reset** column, modified tolerance values for standard and user-defined calibration points can be reset to their default values. |

### 3.4.4 Assessment

CSMcalibrate calibrates the devices under test according to the manufacturer's tolerances. By default, the tolerance values (in percent) refer to the maximum error as specified by the manufacturer. If the tolerance limits have been customized, the percentages refer to the customized values.

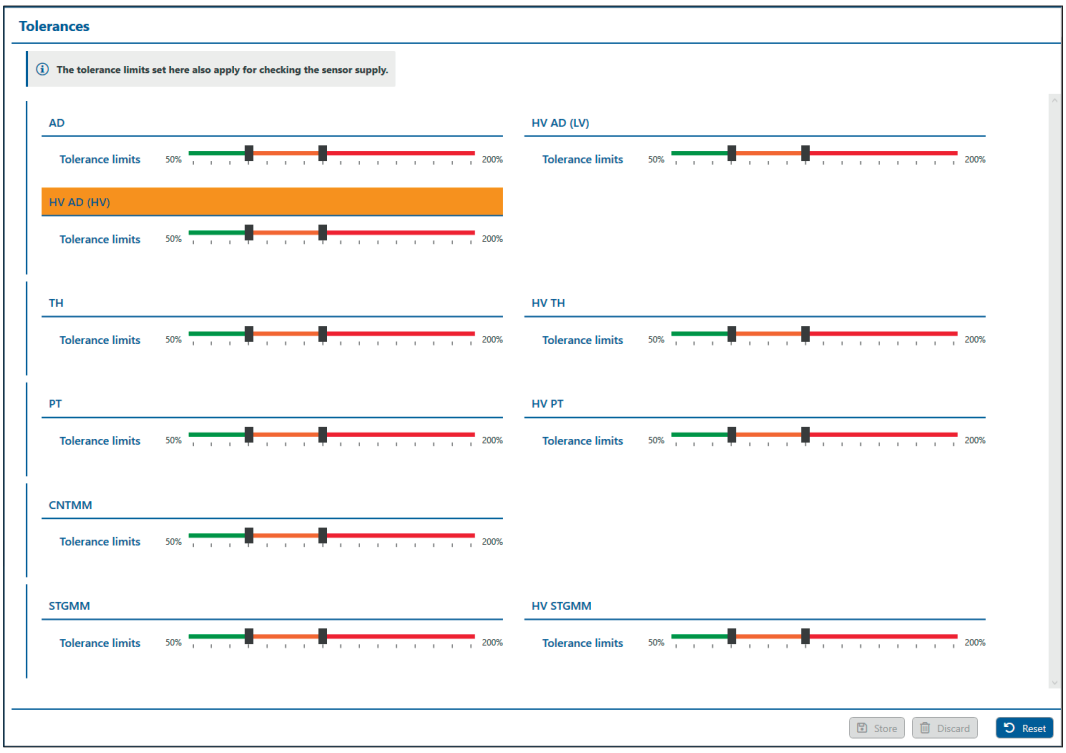


Fig. 3-27: Menu **Assessment | Tolerances**

In the **Assessment | Tolerances** section, the limits recommended are set by default for each type of module. Alternatively, it is possible to define user-specific tolerance ranges for each type of module.

**Displaying and changing tolerance values**

☞ Left-click on the corresponding black slider and keep the mouse button pressed.

⇨ The current tolerance value will be displayed.

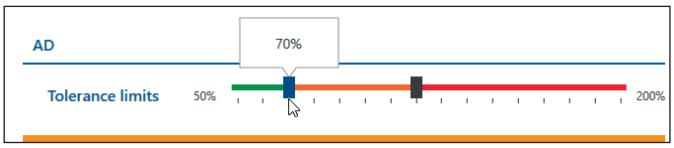


Fig. 3-28: Display of current tolerance value

☞ To change a tolerance value, press and hold the mouse button, move the black slider to the new position and release the mouse button.

| | |
|---|---|
| i | If the left and right sliders are moved up until they overlap, the "conditionally OK" (orange) area is faded out. Only the areas "OK" (green) and "not OK" (red) are displayed. |

### 3.4.5 Import/Export

The "Export" function creates a copy of the CSMcalibrate database and saves it in any target directory. This database copy can be imported by using the "Import" function. These functions are designed to transfer the contents of the CSMcalibrate database from one computer to another (e.g., when changing/replacing a computer). A database copy in the *.cdx exchange format is used for the data transfer.

Fig. 3-29: **Import/Export** menu

**Exporting the database file (exporting computer)**

☞ Click on **Select file path for export**.

⇨ The **Export Data to ...** dialog opens.

⇨ The database file **`CSMdate.cdx`** is displayed in the **File name** field.

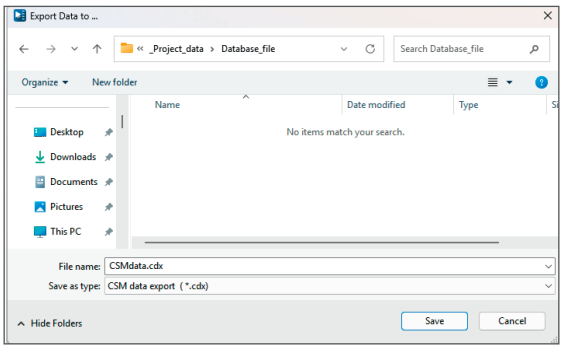


Fig. 3-30: **Export Data to...** dialog

☞ Navigate to the folder where the database file is to be saved.

☞ Click **Save** to store the file in that folder.

**Importing the database file (importing computer)**

☞ Click on **Choose import** file.

⇨ The **Import Data from ...** dialog opens.

☞ Navigate to the directory where the **`CSMdata.cdx`** database file is located.

☞ Select the file and click **Open**.

⇨ The database file is stored in the destination folder on your computer and is available in CSMcalibrate.

| NOTE! | |
|---|---|
| | This feature is available as of program version 2.1.0 and is not downward compatible. Export and import must be performed with the same software version (as of version 2.1.0). |

## 3.5 User management and login

### 3.5.1 Initial login

When CSMcalibrate is started for the first time after installation, the login screen will appear once the splash screen has faded.

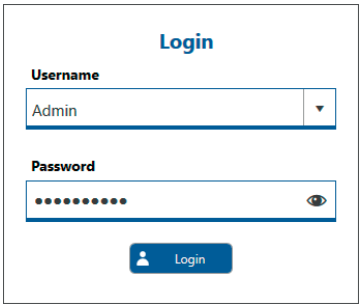


Fig. 3-31: Login mask

| | |
|---|---|
| i | The initial user account automatically has administrator rights. Administrator rights are required to create additional user accounts and to modify the settings of a user account.<br>→ Chapter 3.5.2 "User management" |

☞ Enter the initial login details (username/password) you received along with the software, then click **Login**.

⇨ The **Confirm User** dialog is displayed, prompting you to enter a new password.

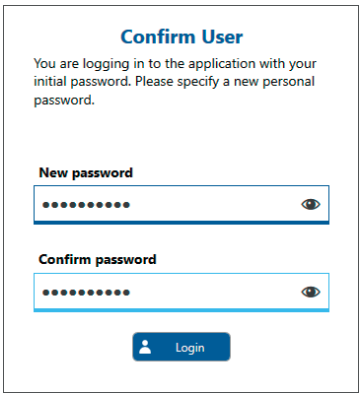


Fig. 3-32: Enter new password

☞ Enter the new password in the **New Password** and **Confirm Password** fields, then click **Login**.

⇨ The CSMcalibrate start screen is displayed.

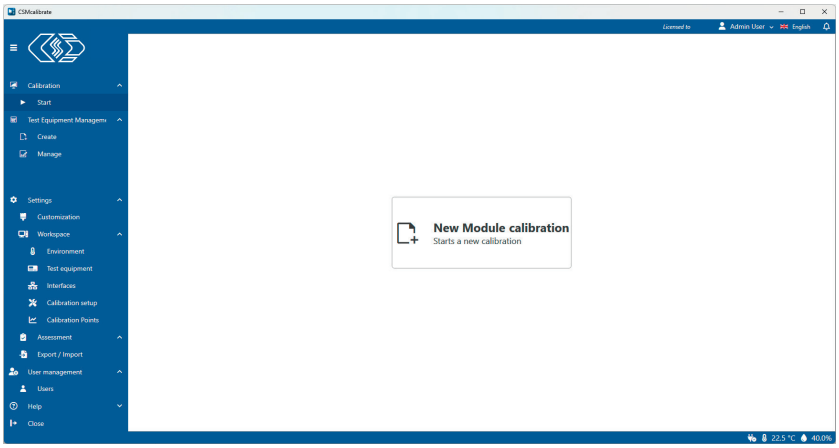


Fig. 3-33: CSMcalibrate start screen

## 3.5.2 User management

The **User management** menu provides the following features:

- Changing the settings of an existing user account
- Creating new user accounts

Access to the list of the existing user accounts is available via the **User Management | Users** menu.

→ Chapter 3.5.2.1 "Opening the user overview"

| | |
|---|---|
| i | Administrator rights are required to modify an existing user account or to create a new one.<br>→ See chapter 3.5.2.2 "Creating a new user account" and chapter 3.5.2.3 "Making changes to a user account" |

There are two options for accessing the settings of the currently active user account:

- via the **User Management | Users** menu (see above)
- via the drop-down menu in the upper-right corner of the header (Fig. 3-34): Clicking the "Edit" button opens the settings screen for the currently active user account.

→ Chapter 3.5.2.3 "Making changes to a user account"

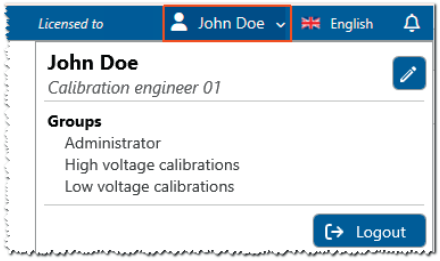


Fig. 3-34: Accessing the user account via header

The following section describes how to access user accounts via the **User management** menu.

### 3.5.2.1 Opening the user overview

☞ Click the **Users** option in the **User management** menu.

⇨ The **User** page is displayed.

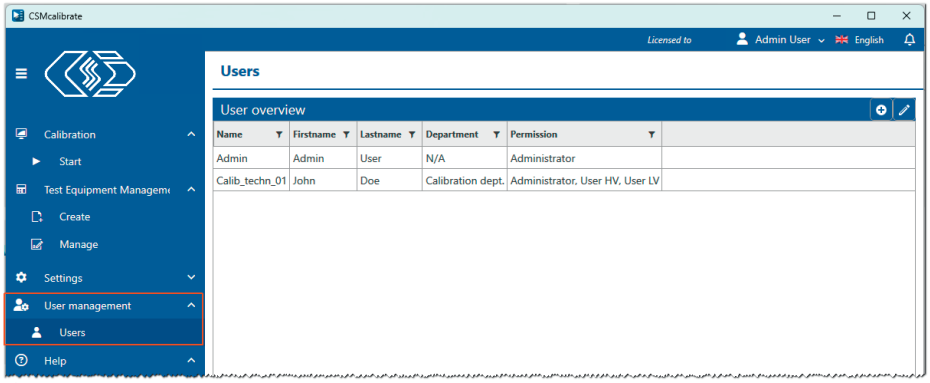


Fig. 3-35: **User management** menu

The **User Overview** contains a table listing the existing user accounts.

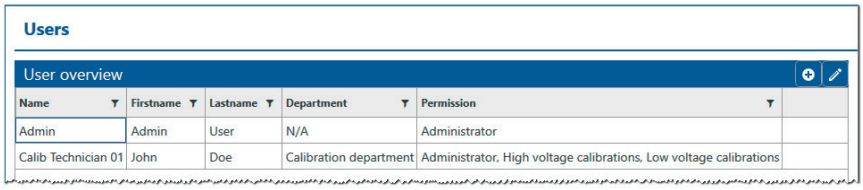


Fig. 3-36: **User overview** table

### 3.5.2.2 Creating a new user account

☞ Click on the "Add" icon button in the table header to create a new user account.

⇨ The input mask **New** for creating a new user account opens.

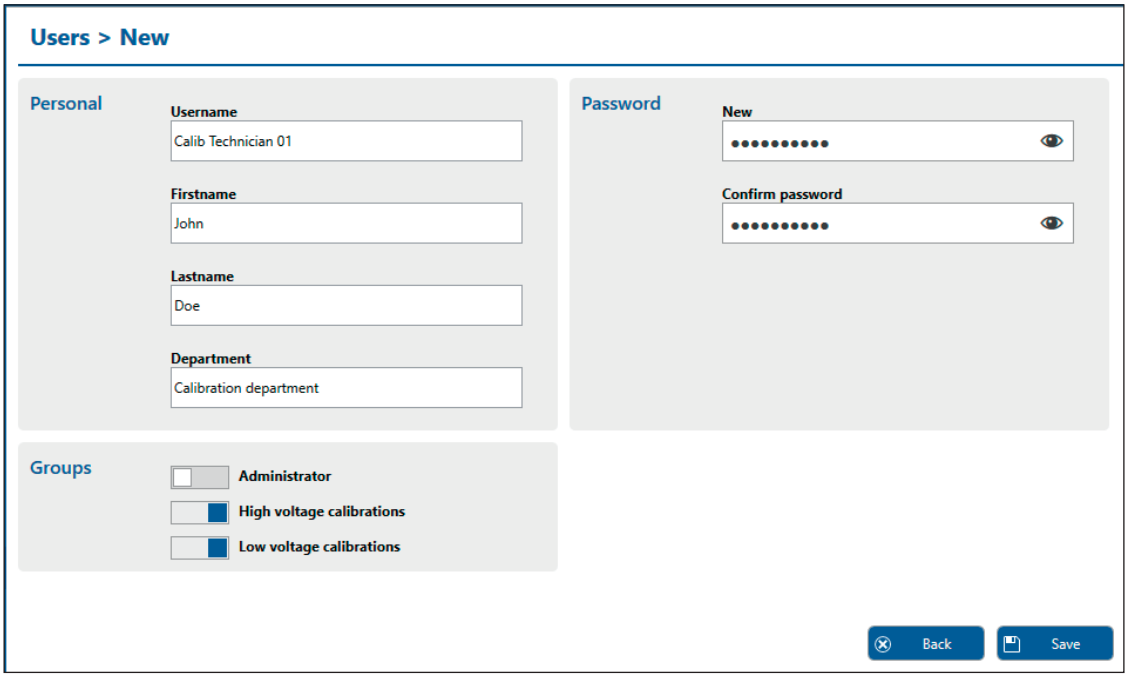


Fig. 3-37: Input mask for new user accounts

- The **Personal** section is designed for entering and managing user-specific data.
- The user rights are specified in the **Groups** section. When an option is enabled, the corresponding user rights will be assigned to the account.
  - **Administrator**: creating and editing user accounts, assigning and changing passwords, access to the menus **Manage Test Equipment**, **Settings** and **Update**. A user account with **Administrator** rights automatically includes the user rights of the groups **High voltage calibrations** and **Low voltage calibrations**.
  - **High voltage calibrations**: user rights for calibrating high-voltage measurement modules
  - **Low voltage calibrations**: user rights for calibrating low-voltage measurement modules
- In the **Password** section, the password is defined or a new password is set.

☞ Click **Save** to create the user account.

| | |
|---|---|
| i | After a user logs in for the first time using the initial password, the **Confirm User** dialog is displayed (Fig. 3-32).<br>The user has to replace the initial password assigned by the administrator by an individual password. This password has to be between 8 and 30 characters long. Any character can be used. |

### 3.5.2.3 Making changes to a user account

☞ Mark the row of the user account to be edited and click on the "Edit" icon button in the table header.

⇨ The input mask for the selected user account opens.

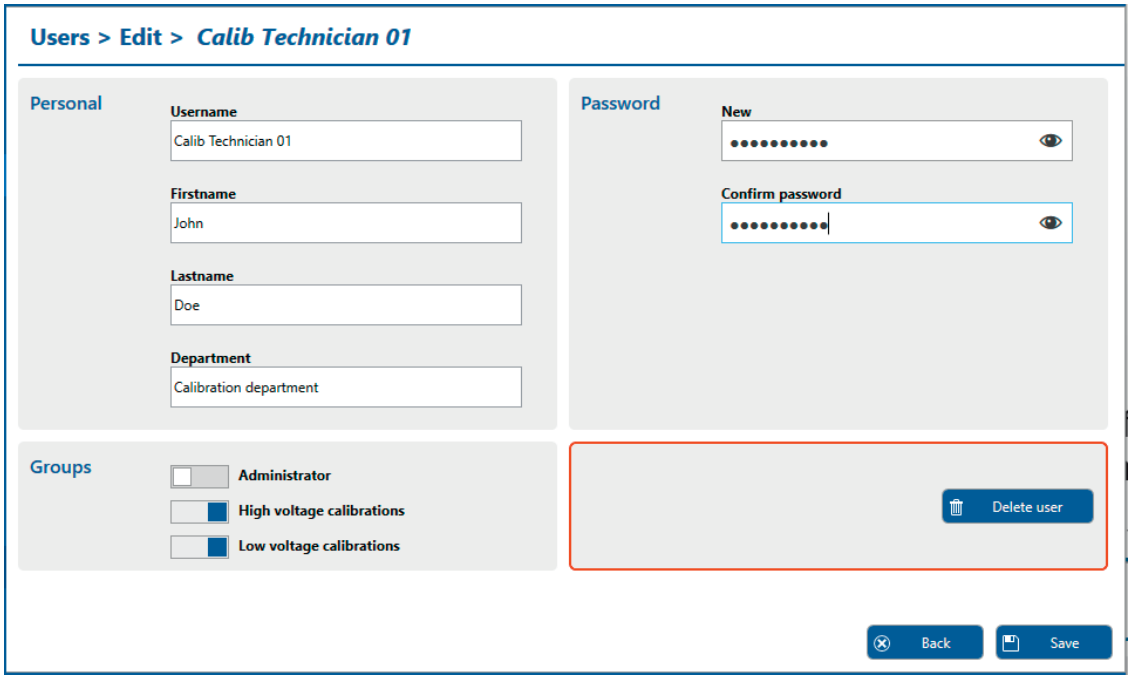


Fig. 3-38: Input mask of an existing user account (administrator view)

In this mask, the settings of a user account can be changed. For example, an administrator can modify user permissions in the **Groups** section, set a new password in the **Password** section, or delete the user account.

| | |
|---|---|
| i | For a standard user account (without administrator rights) only the sections **Personal** and **Password** are displayed. In these sections, a user can make changes, such as setting a new password. |

| | |
|---|---|
| i | Clicking **Delete user** will permanently delete the user account. |

## 3.6 Help

The **Help** menu contains entries with information on the software license, program version and database update.

### 3.6.1 License

This menu contains information on the currently installed CSMcalibrate license and options for updating the license.

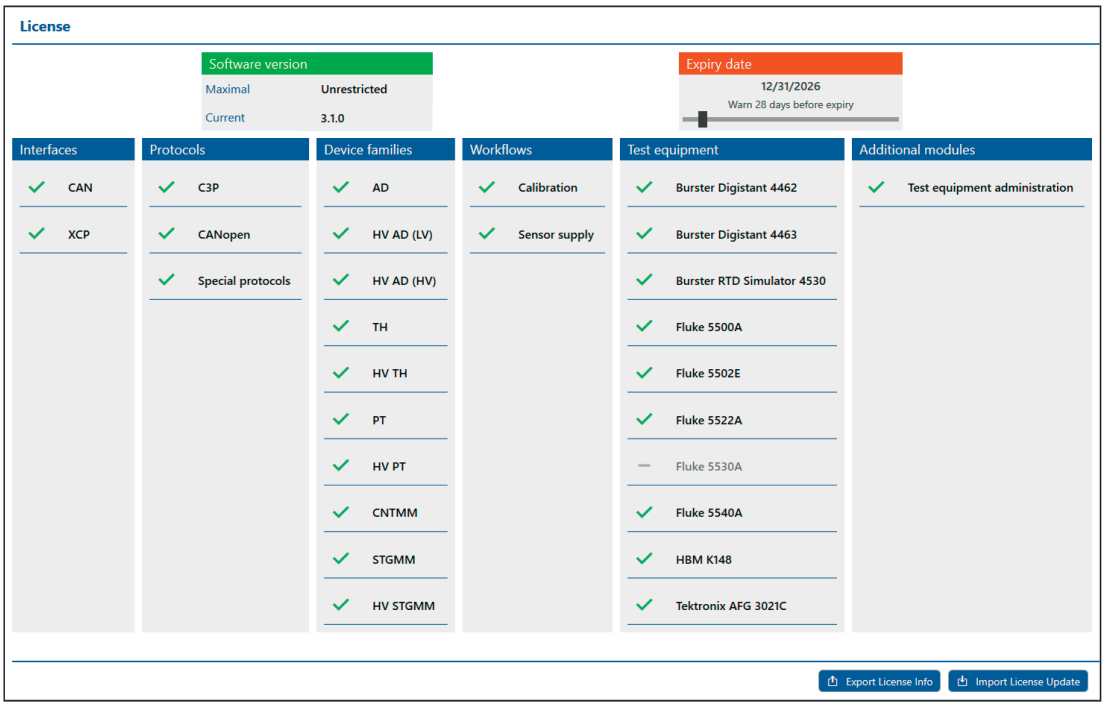


Fig. 3-39: **License** menu

The slider in the info box **Expiry date** (Fig. 3-39, ①) can be used to set the time span in days until the software license expires. At the beginning of the specified time span, a warning message appears after the program start indicating the license expiry date.

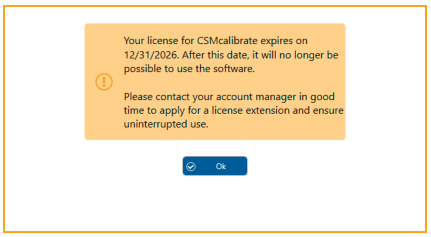


Fig. 3-40: Note on the expiry date of the software license

| | |
|---|---|
| i | A special license for CSMcalibrate is required in order to calibrate particular CSM measurement modules in **CANopen mode** and CSM measurement modules using **special protocols**. For more information, please contact your Vector sales representative. |

**Buttons for importing and exporting license information/licenses**

- **Export License Info** exports details of the currently installed license to a file with the extension *.lif.
- Use **Import License Update** to import a new license file (*.clu) with updated license data.

### 3.6.2 About

This menu item contains information on the current versions of the program and the database.

- **Version**: Software version number
- **Format/Version**: version number of database format/version number of database contents
- **Licensed to**: Licensee's name
- **Release notes**: Link to the release notes of the current software version
- **Quickstart Guide**: link to the CSMcalibrate quickstart guide
- Clicking the button opens a drop-down menu with the options **Log files** and **Calibration certificates.**
  - The **Log files** folder is predefined and contains the log files of the program.
  - The **Calibration certificates** folder stores the calibration protocols generated during calibration of the measurement modules. The location of this folder can be specified under **Customization** in the **Output** menu.
- Clicking the button enables extended logging for the current session. By default, only errors are logged in a log file. With the temporarily extended logging, individual process steps are also recorded in the log file, which, for example, may be helpful for error analysis.

### 3.6.3 Update

The **Database update** menu provides options to import database files (*.dbu) containing updated hard- and firmware information.

The **Current versions** section displays the version numbers of the database (**Version**) and the database design (**Format**) that are currently in use.

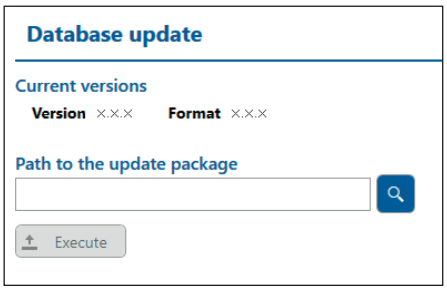


Fig. 3-41: Database update

☞ Select the database file (*.dbu).

☞ Then click the **Execute** button to import the database file.

| | |
|---|---|
| i | When installing a new program version or importing a new database via **Database update**, a backup of the contents of the previously used database will be created.<br>▸ The database file is located at `C:\Users\Public\Documents\CSM GmbH\CSMcalibrate\Database\`.<br>▸ The backup file is stored in the `Backup` subfolder of the `Database\` folder. |

# 4 Appendix

## 4.1 Calibration setups for further CSM measurement modules

### 4.1.1 HV AD2 IF20 MM (CAN)

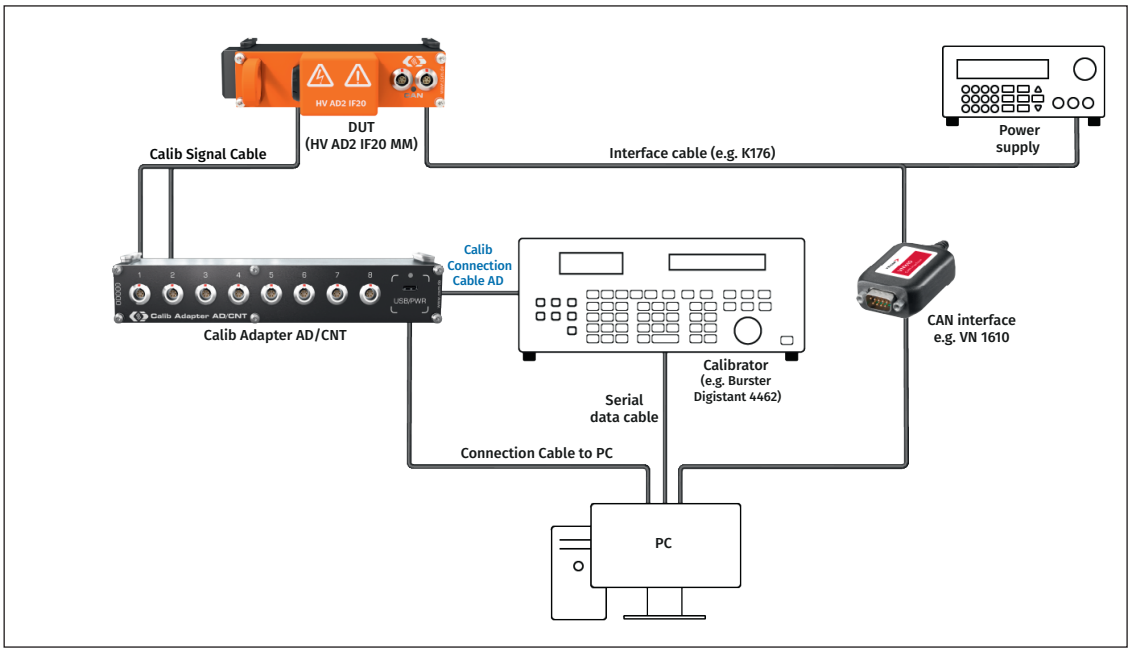


Fig. 4-1: Model setup for the calibration of HV AD2 IF20 MM measurement modules

The model setup in Fig. 4-1 also applies to the following HV CAN measurement modules:

- HV AD4 IF20 TBM
- HV AD4 OW20 MM
- HV AD8 OW20 TBM

In contrast to the setup in Fig. 4-1, a Calib Signal Cable compatible with the module type is required in each case.

### 4.1.2 HV AD4 OW1000 MM (ECAT)

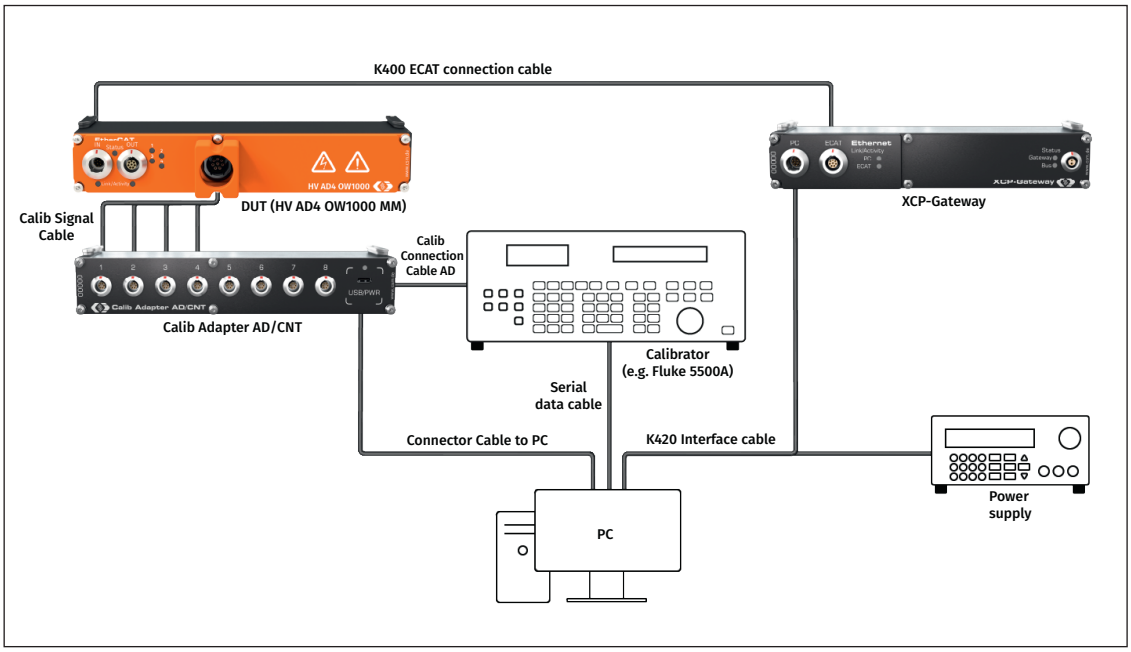


Fig. 4-2: Model setup for the calibration of HV AD4 OW1000 MM measurement modules

The model setup in Fig. 4-2 also applies to the following HV ECAT measurement modules:

- **HV AD4 OW1000 TBM**
- **HV AD4 IF1000 TBM**

In contrast to the setup in Fig. 4-2, a Calib Signal Cable compatible with the module type is required in each case.

### 4.1.3 HV AD4 XW1000 TBM (ECAT)

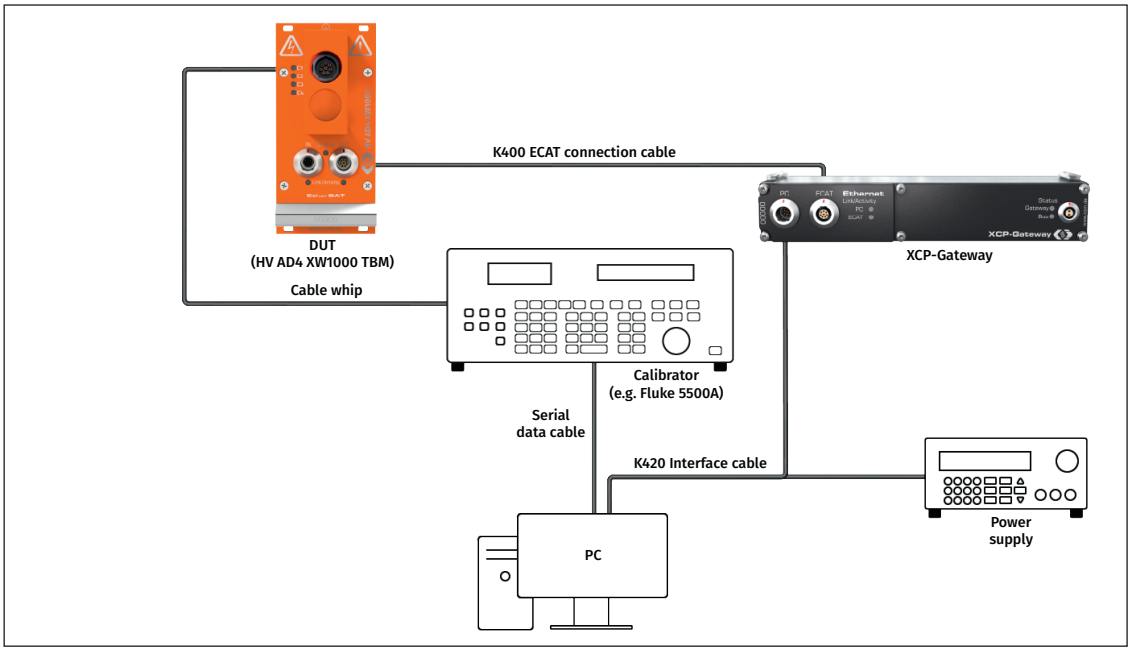


Fig. 4-3: Model setup for the calibration of HV AD4 XW1000 MM measurement modules

The model setup shown in Fig. 4-3 also applies to the HV ECAT measurement module **HV AD4 XW1000 MM**.

### 4.1.4 HV AD4 XW20 MM (CAN)

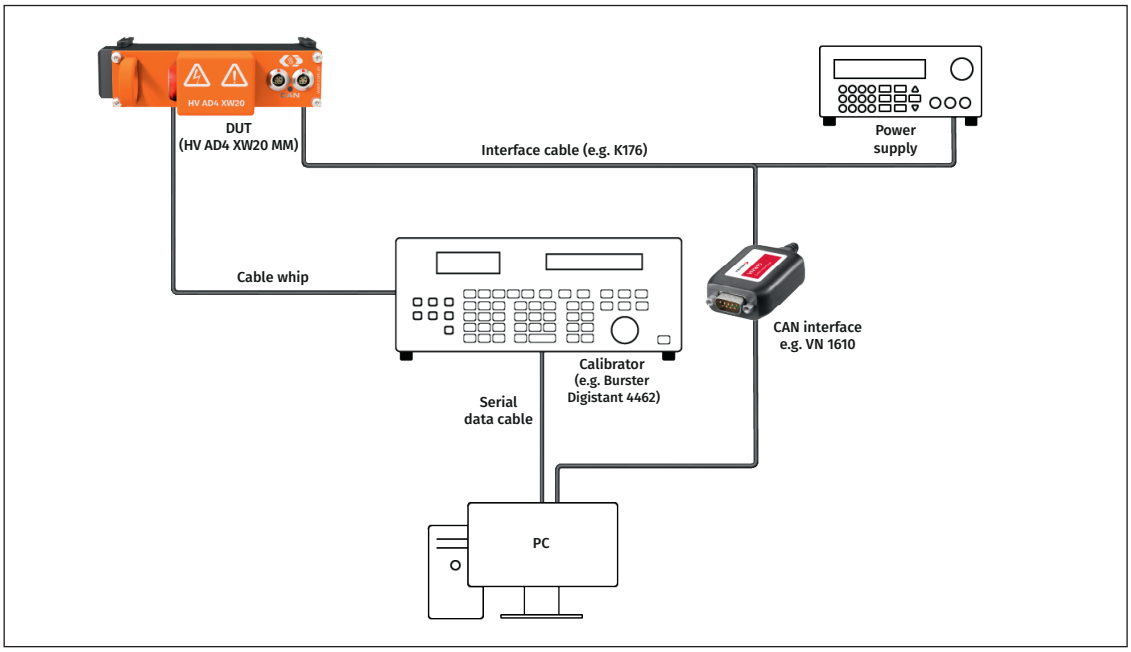


Fig. 4-4: Model setup for the calibration of HV AD4 XW20 MM measurement modules

The model setup shown in Fig. 4-4 also applies to the HV CAN measurement module **HV AD4 XW20 TBM**.

### 4.1.5 HV AD4 XW4000 (XCP)

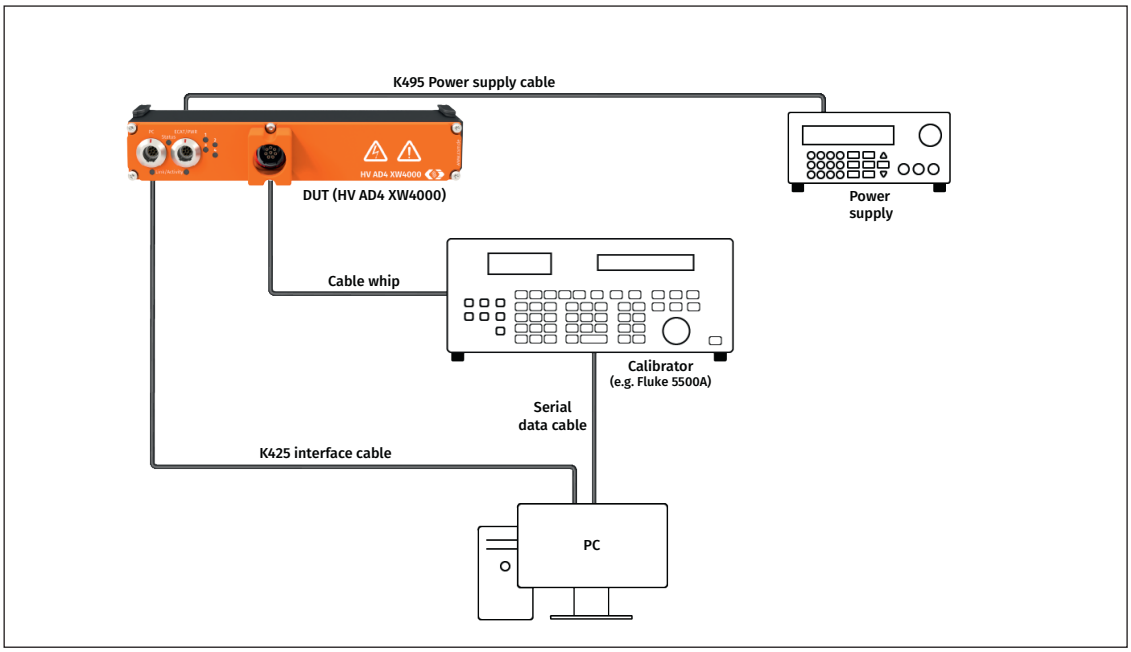


Fig. 4-5: Model setup for the calibration of HV AD4 XW4000 MM measurement modules

### 4.1.6 HV PT2 MM (CAN)

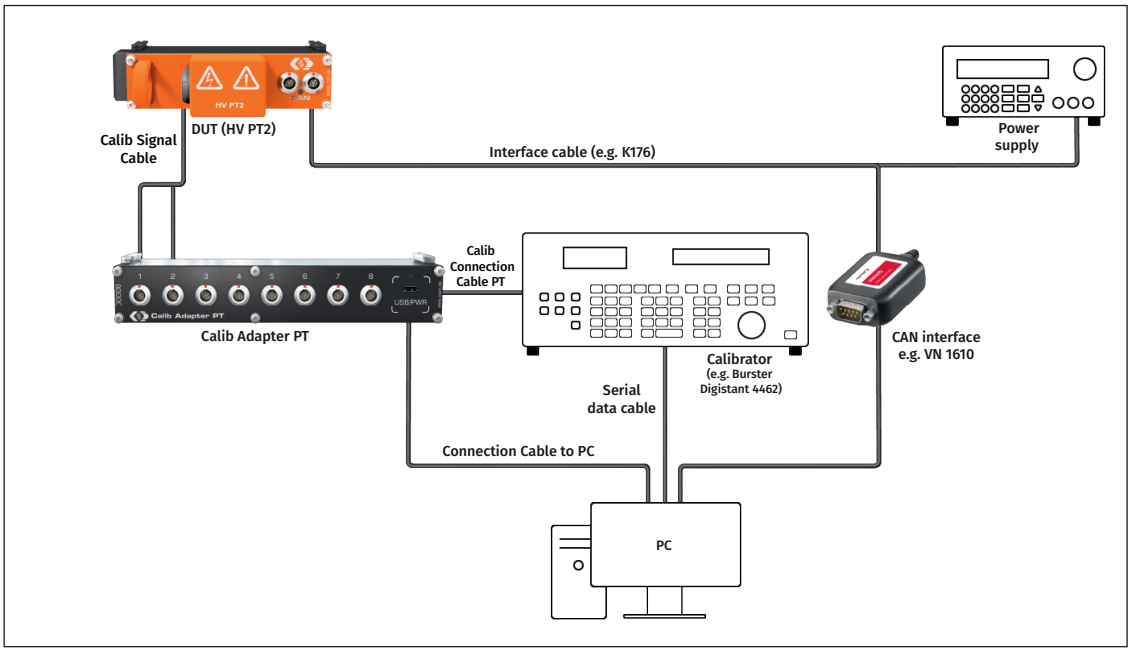


Fig. 4-6: Model setup for the calibration of HV PT2 MM measurement modules

The model setup shown in Fig. 4-6 also applies to the HV CAN measurement module HV PT8 TBM. In contrast to the setup in Fig. 4-6, a Calib Signal Cable compatible with the module type HV PT8 TBM is required.

### 4.1.7 HV STG4 pro MM (ECAT)

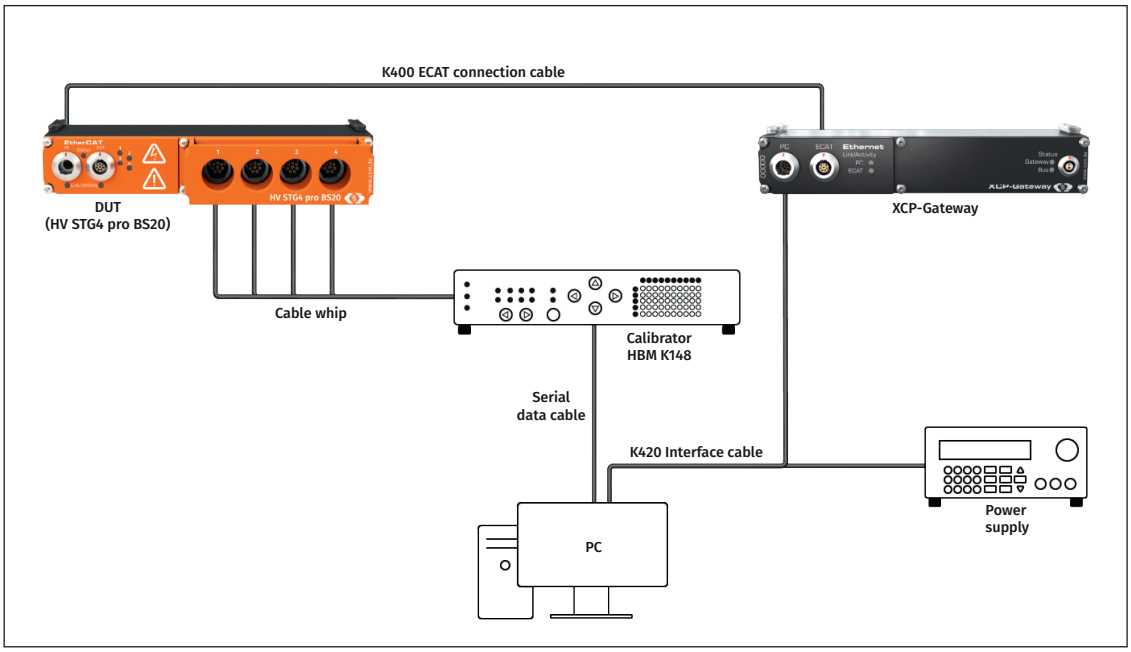


Fig. 4-7: Model setup for the calibration of HV STG4 MM measurement modules

### 4.1.8 HV TH4 evo (CAN)

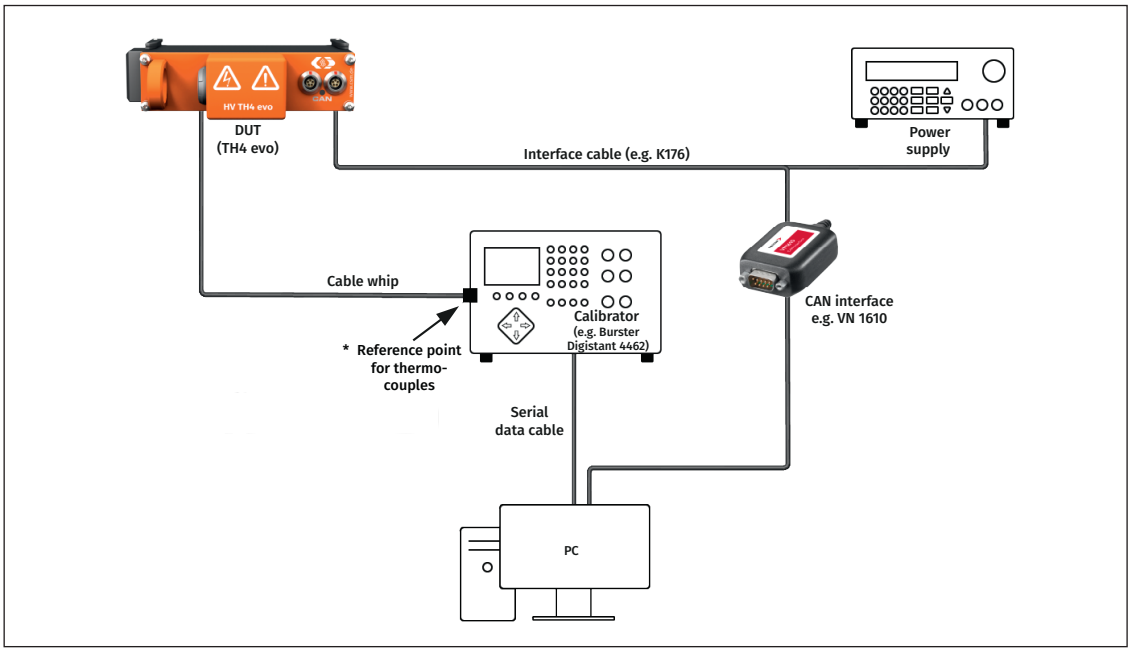


Fig. 4-8: Model setup for the calibration of HV TH4 evo MM measurement modules

The model setup shown in Fig. 4-8 also applies to the HV CAN measurement module HV TH8 evo TBM. In contrast to the setup in Fig. 4-8, a cable whip suitable for the HV TH8 evo TBM is required.

* Some calibrators, such as the Burster Digistant 4462, require a reference point (adapter) for thermocouples to connect a cable whip.

## 4.2 List of figures

Fig. 2-1: Model setup for the calibration of AD CAN measurement modules . . . . . 5
Fig. 2-2: Model setup for the calibration of AD ECAT measurement modules . . . . . 6
Fig. 2-3: Model setup for the calibration of CNT evo CAN measurement modules . . . . . 7
Fig. 2-4: Model setup for the calibration of PT CAN measurement modules . . . . . 8
Fig. 2-5: Model setup for the calibration of STG CAN measurement modules . . . . . 9
Fig. 2-6: Model setup for the calibration of STG ECAT measurement modules . . . . . 10
Fig. 2-7: Model setup for the calibration of TH CAN measurement modules . . . . . 11
Fig. 2-8: CSMcalibrate start screen . . . . . 12
Fig. 2-9: **New module calibration** button . . . . . 12
Fig. 2-10: Enter the article number of the DUT . . . . . 12
Fig. 2-11: **Workflow overview** window . . . . . 13
Fig. 2-12: Start screen for the calibration with subsequent test of the sensor supply . . . 14
Fig. 2-13: Calibration process . . . . . 14
Fig. 2-14: Calibration process successfully completed . . . . . 15
Fig. 2-15: Checking the sensor supply . . . . . 15
Fig. 2-16: Sensor supply check completed . . . . . 16
Fig. 2-17: Details on the calibration process . . . . . 16
Fig. 2-18: Detailed information on the sensor supply test . . . . . 16
Fig. 2-19: **Customization** form . . . . . 17
Fig. 2-20: Progress bar calibration certificate . . . . . 17
Fig. 2-21: Calibration certificate (sample) . . . . . 17
Fig. 3-1: User interface CSMcalibrate . . . . . 18
Fig. 3-2: Display of temperature and relative humidity at the calibration station . . . . 19
Fig. 3-3: **Calibration** menu . . . . . 19
Fig. 3-4: Table **Test equipment overview** . . . . . 20
Fig. 3-5: **New test equipment** form . . . . . 20
Fig. 3-6: **New department** dialog . . . . . 21
Fig. 3-7: Table **Test equipment overview** . . . . . 21
Fig. 3-8: **Calibration certificate** menu . . . . . 22
Fig. 3-9: **Test equipment overview** table, **Calibration certificates** submenu . . . . . 22
Fig. 3-10: Menu buttons . . . . . 23
Fig. 3-11: **Calibration certificate options | Output** . . . . . 24
Fig. 3-12: **Calibration certificate options | Header** . . . . . 25
Fig. 3-13: **Calibration certificate options | Title page** . . . . . 25
Fig. 3-14: **Calibration certificate options | Remarks** . . . . . 26

Fig. 3-15: **Sample document** (left), **Live preview** (right) . . . . . 26
Fig. 3-16: **Environment** menu (automatic monitoring enabled) . . . . . 27
Fig. 3-17: Warning message: relative humidity values outside the reference range . . . . 27
Fig. 3-18: **Test Equipment** menu . . . . . 28
Fig. 3-19: **Interfaces** menu. . . . . 29
Fig. 3-20: Connected interfaces. . . . . 29
Fig. 3-21: Switch position **Individual settings** . . . . . 29
Fig. 3-22: **Calibration setup** menu . . . . . 30
Fig. 3-23: **Calibration points** menu . . . . . 31
Fig. 3-24: Table with standard calibration points. . . . . 32
Fig. 3-25: User-defined calibration point has been added. . . . . 32
Fig. 3-26: Modified tolerance values . . . . . 33
Fig. 3-27: Menu **Assessment | Tolerances** . . . . . 34
Fig. 3-28: Display of current tolerance value . . . . . 34
Fig. 3-29: **Import/Export** menu . . . . . 35
Fig. 3-30: **Export Data to...** dialog. . . . . 35
Fig. 3-31: Login mask. . . . . 36
Fig. 3-32: Enter new password . . . . . 36
Fig. 3-33: CSMcalibrate start screen . . . . . 37
Fig. 3-34: Accessing the user account via header . . . . . 37
Fig. 3-35: **User management** menu . . . . . 38
Fig. 3-36: **User overview** table . . . . . 38
Fig. 3-37: Input mask for new user accounts . . . . . 38
Fig. 3-38: Input mask of an existing user account (administrator view) . . . . . 40
Fig. 3-39: **License** menu . . . . . 41
Fig. 3-40: Note on the expiry date of the software license . . . . . 41
Fig. 3-41: Database update . . . . . 43
Fig. 4-1: Model setup for the calibration of HV AD2 IF20 MM measurement modules. . . 44
Fig. 4-2: Model setup for the calibration of HV AD4 OW1000 MM measurement modules 45
Fig. 4-3: Model setup for the calibration of HV AD4 XW1000 MM measurement modules 45
Fig. 4-4: Model setup for the calibration of HV AD4 XW20 MM measurement modules . 46
Fig. 4-5: Model setup for the calibration of HV AD4 XW4000 MM measurement modules 46
Fig. 4-6: Model setup for the calibration of HV PT2 MM measurement modules. . . . . 47
Fig. 4-7: Model setup for the calibration of HV STG4 MM measurement modules. . . . . 47
Fig. 4-8: Model setup for the calibration of HV TH4 evo MM measurement modules . . . 48

## 4.3 List of tables

Tab. 1-1: Symbols and writing conventions . . . . . 1
Tab. 2-1: List of CSM measurement modules that can be calibrated (CAN/ECAT/XCP) . . . . 3

## Copyright

**Vector Informatik GmbH**

Ingersheimerstr. 24
70499 Stuttgart, Germany
Tel. +49.711.80670.0, Fax: +49.711.80670.111
E-Mail: info@vector.com
Internet: https://www.vector.com
Technical Questions
Sales Information

© Copyright Vector Informatik GmbH 2026